# COMPARATIVE ANALYSIS OF MODIFIED SHE-PSO PWM AND LS-PWM TECHNIQUES

**[1]V. Ramu,[2]Dr. P. Satish Kumar,[3]Dr. G.N. Srinivas**

[1,3]Department of Electrical and Electronics Engineering, Jawaharlal Nehru Technological University Hyderabad, Hyderabad

[2]Department of Electrical engineering, University College of Engineering, Osmania University, Hyderabad

**Abstract:**

To address the issues of the multilevel inverters with better performance and efficiency there has been increased advancements with level shift PWM technique. The paper deals with the analysis of some such advancements like particle swarm optimization techniques and is contrasted to pulse width modulation technique in terms of total harmonic reduction, feasibility, switching pattern of PWM techniques and efficiency. Due to the conventional PWM techniques the complexity of the increased number of elements and harmonics can be reduced with the particle swarm optimization technique and can also determine the optimized switching angles in reducing the selected harmonics. The simulations of the analysis are carried out in the Matlab and the same are presented in the paper which are indeed proved to be better for PSO in contrast to conventional PWM techniques.

**Key words:** multi-level inverters (MLI), LS-PWM, particle swarm optimization, optimized switching angles, selective harmonic elimination.

## I. Introduction:

In modern electrical and electronics the major drawback of the switches is generating the harmonics classified as voltage and current harmonics causing huge loss to the power system. In recent trends of advancements in multi-level inverters has been a wide area for development of new techniques in selective harmonic elimination, increased performance and efficiency.One such area is redefining the switching angles of the multi-level inverter for efficient performance. The ability of the multi-level inverters is to convert high voltages of AC from cascaded DC sources[1,2] thus making the MLI a part of the modern power grids in high power applications due to added benefits of reduced voltage stresses, filter sizes, various methods for operating of switching angles optimization[3-6] and different methods for harmonic elimination.

For elimination of harmonics from the switches of MLI a few techniques like sine triangle PWM[7] , Optimal Minimization of Total Harmonic Distortion[8] and Selective Harmonic Disposal Pulse Width Modulation[9] are carried out for symphonious end in the cascaded inverters. Modified SHE-PWM is a popular strategy for exchanging switching angles. This limits the THD from a voltagewaveform generated by a voltage-source inverter[10]. Most typically, the Newton-Raphson(NR) technique is utilized whichadditionally takes care of the symphonious issue. SPWM strategy is extremely successful for noticing the inverter yield voltage however this technique can make high loss in switching actions.

Optimal minimization THD technique can just cycle to limit the THD, it can't consider the significance of lower and higher frequencies [11,12]. MODIFIED SHE-PWM is the best strategy to wipe out lower

harmonics and exposed to low switching losses. It further develops power quality of output and also decreases the expense of channel[13]. The different techniques as NRmethod[14], Walsh functions[15] and Block-pulse [16] functions are engaged with the harmonic minimization process in MLI. These multiple of techniques of harmonic suppression have their own weakness. NR strategy requires initial speculations, disparity issues and gives no ideal arrangement. Walsh function and also Block-pulse strategy just settles direct conditions, on account of non-linear conditions which are troublesome to observe better results of switching.

Thus we need strategy to appropriate initial qualities to merge to a legitimate arrangement. As of late, non-conventional strategies dependent on transformative calculations, like Particle Swarm Optimization (PSO)17, Bee Calculations[24] have been utilized for inverter harmonic elimination[18].

The Particle Swarm Optimization(PSO) strategy was planned in 1995 by Edward and Kennedy[14]. These calculations were motivated by social behavior of creatures like birds, tutoring fish. This strategy for advancement is based on the reason that people living in general public have an assessment that is essential for a bunch of convictions that are shared by every conceivable person. Every individual can alter his own perspective based on three variables:

- Information about the climate
- Recorded information or past encounters
- Recorded information or previous encounters ofpeople in your area or neighborhood.

The PSO[19] method is like a hereditarycalculation that begins with a arbitrary populace grid. In contrast to hereditary calculations, PSOhas no administrators like hybrid and transformation. The lines in the lattice are called particles. These contain the variable qualities. Every molecule continues on the expense surface with a given speed. These particles update their speed and position dependent on best available nearby and global arrangements

Thus in this paper the PSO method with selective harmonic elimination(MODIFIED SHE - PSO)[20] is contrasted with the conventional level shift PWM (LS-PWM) to observe the results for two inverter namely: 17 level MLI and 53 level MLI. The various observations such as harmonics, switching patterns, efficiency, performance issues[25] are studied in further sections. The results and observations of the MODIFIED SHE-PSO of 17and 53 level MLI are also contrasted with the results of 17 and 53 level MLI of LS-PWM.

## II. COMPARISON OF SYSTEMS

### 2. a. comparison of MODIFIED SHE-PSO in 17 level MLI with LS-PWM:

This 17 level MLI connects 10 switches and 4 dc sources generating 17 levels of voltages without any need fro inductor, capacitor, freewheeling diodes. The structure allows us draw maximum of 8Vdc and min of -8Vdc in 17 levels ($8V_{dc}$, $7V_{dc}$, $6V_{dc}$, $5V_{dc}$, $4V_{dc}$, $3V_{dc}$, $2V_{dc}$, $V_{dc}$, 0, $V_{dc}$, $-V_{dc}$, $-2V_{dc}$, $-3V_{dc}$, $-4V_{dc}$, $-5V_{dc}$, $-6V_{dc}$, $-7V_{dc}$ and $-8V_{dc}$). The magnitude of voltage level in main model is given by:

$$V_{dc,main} = (N_{sm} + 1)V_{dc,sub}$$

The proposed configuration of the 17 level MLI is depicted in fig.1 as shown below which has reduced number of switches free of other supporting elements.

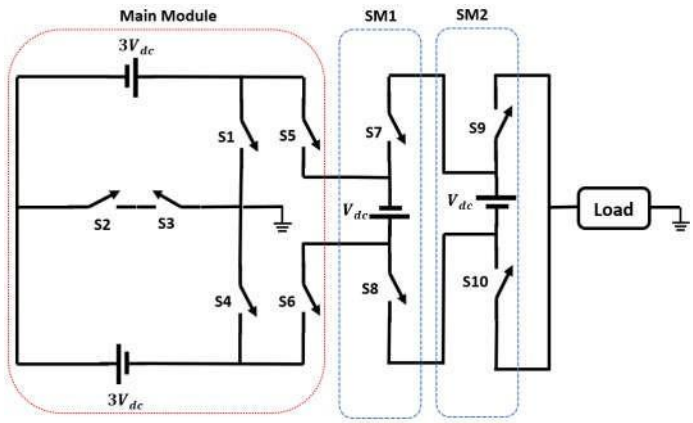


Fig.1 proposed 17 level MLI

The significant power loss of switches in MLIs are due to switching losses and conduction losses[19].Conductionpower losses are more viable in low switching frequencies, though the switching power loss is overwhelming in high frequencies. Conduction loss of IGBT with antiparallel diode is for the on-state condition of resistance and voltages of the two semiconductors and diode. Let Vs is on-state voltage, Rs is the semiconductor resistance, $V_d$ is diode voltage, Rd is resistance of diode. The conduction loss of diode as $P_{CD}$ and semiconductor $P_{cs}$ are: [21]

$$P_{CD}(t) = V_d i(t) + R_d i^2(t)$$
$$P_{CS}(t) = V_S i(t) + [R_S i^{\beta}(t)] i(t)$$

The proposed low switch count 17 level MLI integrates level shift PWM technique in switching patterns of the MLI to draw the output voltage with reduced harmonics. The output voltage and current patterns of 17 level MLI for different modulation indexes are shown in below plots fig. 2(a) &2 (b). the harmonic profile of voltage and current waves of the 17 level MLI are depicted in fig.3(a)& 3(b) with modulation index of 1 with LS-PWM technique.

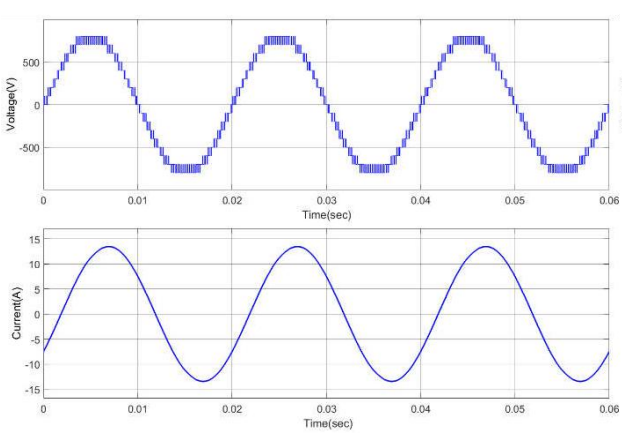


2(a)

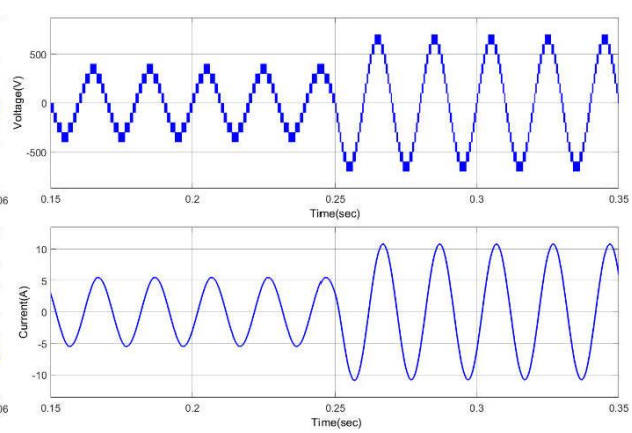


2(b)

Fig 2. 17 level output voltage and load current with LS-PWM (a) when modulation index is 1 and load is 50Ω and 50mH (b) modulation index is changed from 0.4 to 0.8 and load is 50Ω and 50mH

The switching patterns of the 17 level multilevel inverter with level shift PWM technique are plotted in fig.3

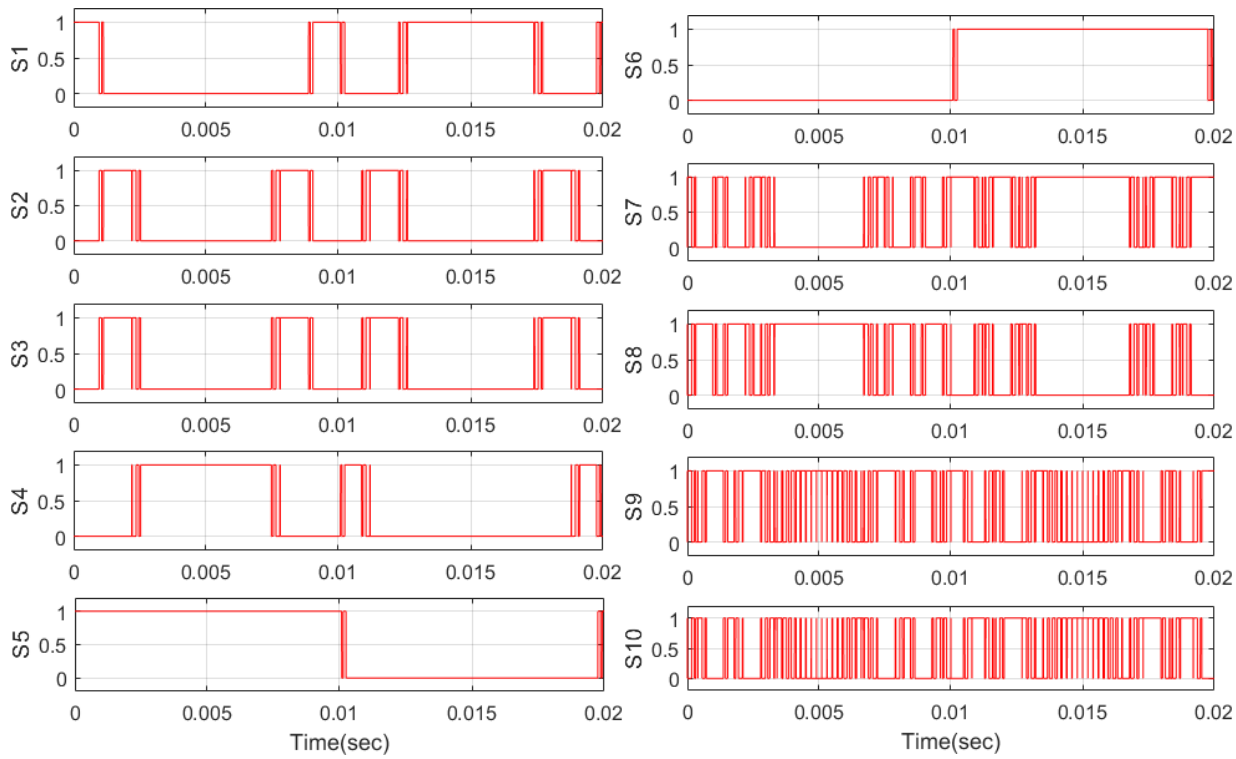


Fig 3. Switching pulses of S1-S10 for LS-PWM in 17 level inverter

For above proposed 17 level MLI the conduction and switching losses are in calculated manner which cannot be suppressed in an easy way. In order to counter the losses and to yield quality output the particle swarm optimization PSO algorithm is utilized for the proposed calculation in 17 level MLI to compute the switching system. MODIFIED SHE PSO is renowned switching procedure that is broadly used to explicitly wipe out the selected order harmonics from the output waveform of the MLI. MLI produces voltage with appropriate switching points. At first glance, harmonics are in the output voltage and moreover, odd frequencies are hard to compute albeit the even harmonics are zero at the resultant output.

Subsequently, MODIFIED SHE-PSO technique can utilize Fourier investigation work to compute the odd harmonics in the voltage. Appropriately, Fourier examination of result stage voltage is given by

$$V(\omega t) = \sum_{n=1}^{\infty} V_n cos(n\omega t) + V_n sin(n\omega t) \tag{1}$$

The odd harmonics amplitude including the fundamental component of the system can be expressed as

$$a_n = \frac{4V_{cd}}{n\pi}\sum_{k=1}^{s}\cos(n\theta_k) \tag{2}$$

The PSO calculation must be liable for tracking down the ideal switching angles ($\theta_k$) of the arrangement of conditions as depicted in Eq. 2. It limits the THD and helps to maintain the steady &sufficiency of the crucial symphonious part to the ideal output voltage. The calculations were written in MATLAB forboth the function fitness and also the PSO. The flow chart for the PSO based algorithm that is implemented for the MLI for both 17 and 53 inverters is depicted in fig.4

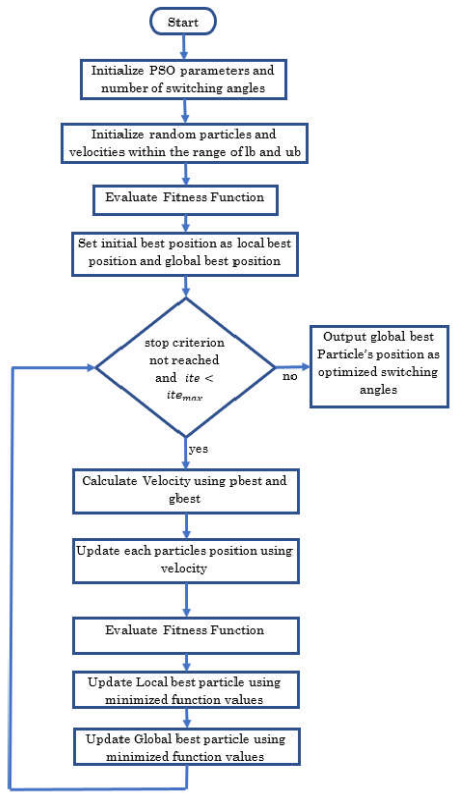


Fig.4 Flow chart of MODIFIED SHE-PSO algorithm in 17 level and 53 level MLI system.

The output voltage levels of the 17 level MLI after implementing the MODIFIED SHE-PSO algorithm into the system is plotted in fig.6. The voltage and current waves obtained after careful analysis and selection of switching angles for optimized performance of MLI are plotted in fig.5.

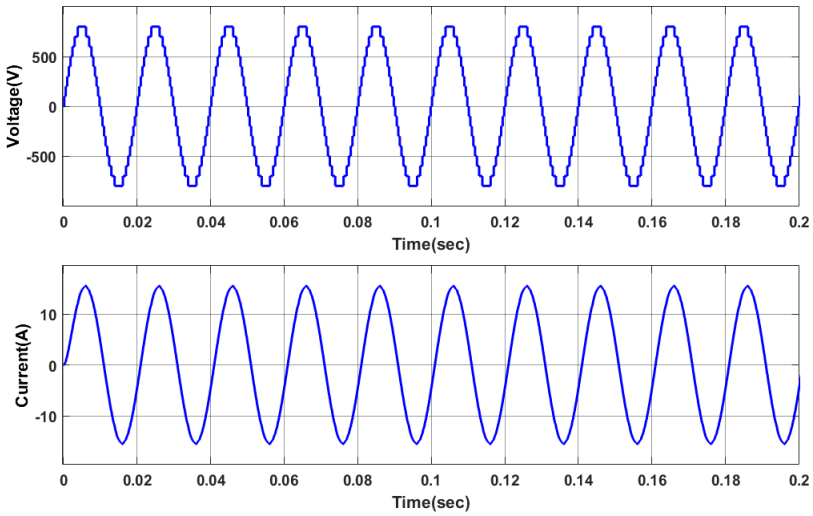


Fig.5 17 level inverter output voltage and current with Modified SHE with 50Ω and 50mH load

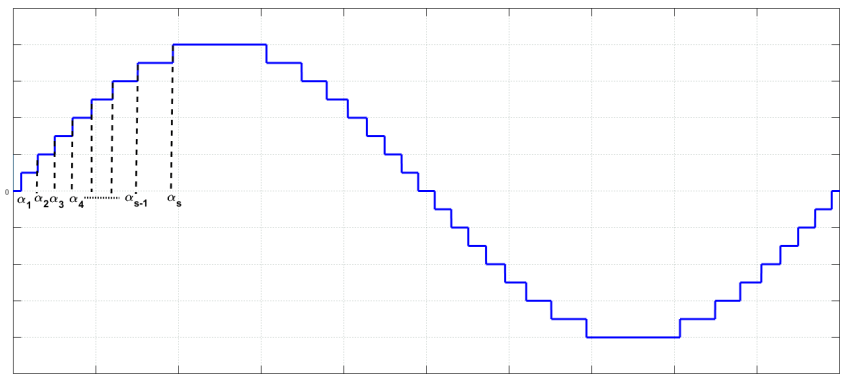


Fig.6Output voltage levels of MLI with switching angles

The optimized switching angles that are decided by the PSO algorithm after selective elimination of harmonics are tabulated below in table.1 for both the positive and negative waveforms which are:

| | |
|---|---|
| $\alpha_1$ | 3.6 |
| $\alpha_2$ | 10.8 |
| $\alpha_3$ | 18.18 |
| $\alpha_4$ | 25.938 |
| $\alpha_5$ | 34.21 |
| $\alpha_6$ | 43.4 |
| $\alpha_7$ | 54.32 |
| $\alpha_8$ | 69.65 |

Table.1 optimized angles for 17 level inverter with Modified SHE using PSO.

Comparison of the THD analysis of the 17 level MLI with LS-PWM technique in comparison to MODIFIED SHE–PSO based algorithm are plotted in fig.7 and fig.8 respectively. From the THD analysis it is clear that the harmonic content of the MODIFIED SHE-PSO algorithm is at reduced rate of

3.72% &0.47% for voltage and current in comparison to 8.13% and 0.55% of LS-PWM voltage and current. The below results denote the efficiency of the PSO algorithm in terms of voltage and current harmonics, power quality.

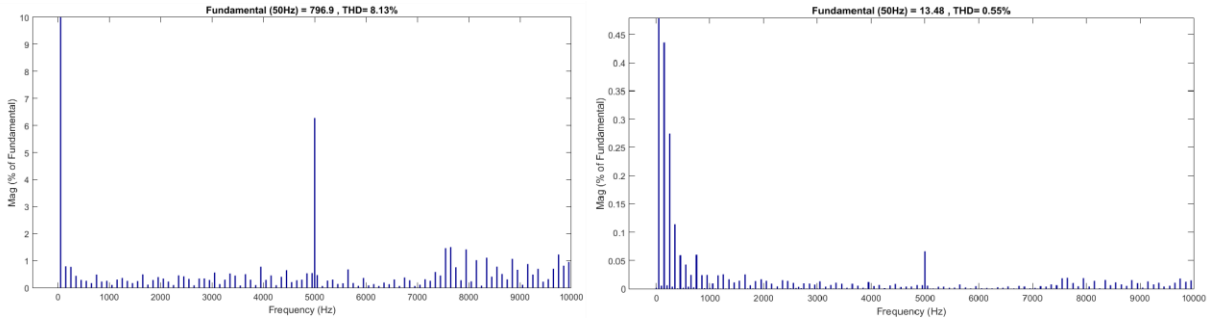


7(a) 7(b)

Fig 6. THD of output voltage and current with LS-PWM when modulation index is 1 and load is 50Ω and 50mH

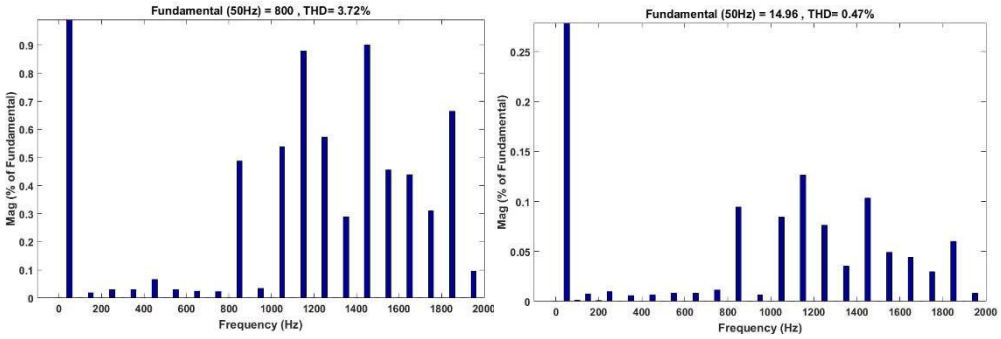


Fig.8THD of output voltage and current for 17 level inverter with Modified SHE using PSO

**2. b. comparison of MODIFIED SHE-PSO in 53 level MLI with LS-PWM:**

The same above discussions carried out in the 17 level MLI are applicable to the 53 level MLI in terms of performance and output waveforms. The 53 level MLI introduced in order to further reduce the THD content in the system.The 53 level MLI is designed with 8 submodules each with a separateDC source and 1 main module with 2 DC sources with 22 number of total switch count. Though the number of switches are high compared to 17 level MLI system the performance and efficiency of the 53 level MLI is far better in terms of near to sine wave output generations making the output power to be qualitative. In spite of these the type switching patterns techniques in the system make the harmonics to prevail within. There are many PWM techniques but in short the study focuses on wellness factor of MODIFIED SHE-PSO based MLI in comparison to LS-PWM in terms of THD in voltage and current wave forms, which are discussed in further sections. The proposed MLI with conventional LS PWM is depicted in fig.9.

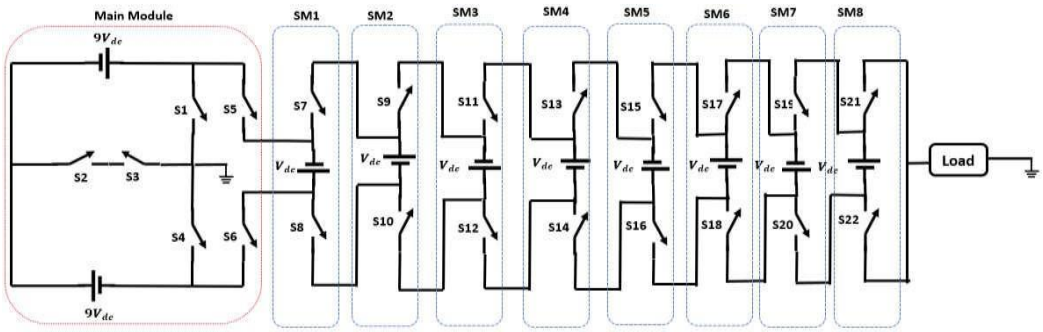


Fig.9 53 level inverter

The optimized switching angles that are decided by the PSO algorithm after selective elimination of harmonics are tabulated below in table.1 for both the positive and negative waveforms which are as follows:, the switching angles are decided by PSO after careful analysis from flow chart for which the harmonics could be suppressed in system at greater content for local and global variables.

| | | | | | | | |
|---|---|---|---|---|---|---|---|
| $\alpha_1$ | 1.098 | $\alpha_9$ | 19.08 | $\alpha_{17}$ | 39.384 | $\alpha_{25}$ | 70.434 |
| $\alpha_2$ | 3.294 | $\alpha_{10}$ | 21.42 | $\alpha_{18}$ | 42.3 | $\alpha_{26}$ | 78.732 |
| $\alpha_3$ | 5.508 | $\alpha_{11}$ | 23.814 | $\alpha_{19}$ | 45.36 | | |
| $\alpha_4$ | 7.722 | $\alpha_{12}$ | 26.244 | $\alpha_{20}$ | 48.582 | | |
| $\alpha_5$ | 9.954 | $\alpha_{13}$ | 28.728 | $\alpha_{21}$ | 52.038 | | |
| $\alpha_6$ | 12.204 | $\alpha_{14}$ | 31.266 | $\alpha_{22}$ | 55.782 | | |
| $\alpha_7$ | 14.472 | $\alpha_{15}$ | 33.894 | $\alpha_{23}$ | 59.922 | | |
| $\alpha_8$ | 16.758 | $\alpha_{16}$ | 36.594 | $\alpha_{24}$ | 64.656 | | |

Table.2 optimized angles for 53 level inverter with Modified SHE using PSO

The output voltage and current wave forms for the 53 level MLI with Modified SHE using PSO are depicted in fig.10. The output wave forms are based on the MODIFIED SHE-PSO which attained a better results in contrast to LS-PWM technique which are proved from THD analysis.

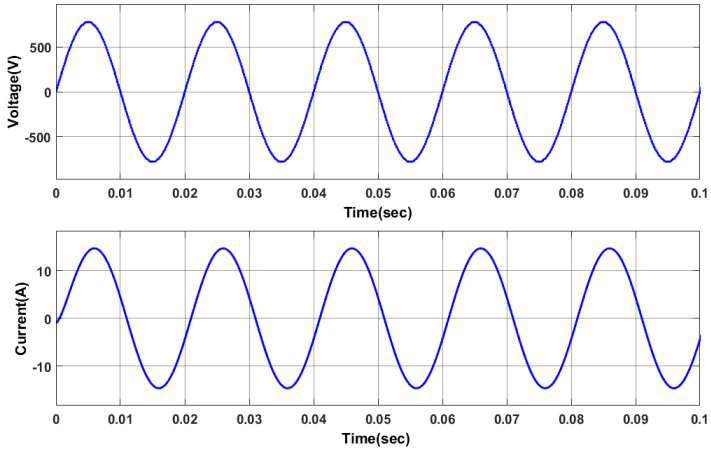


Fig.10 53 level inverter output voltage and current with Modified SHE-PSO with 50Ω and 50mH load

Comparison of the THD analysis of the 53 level MLI with LS-PWM technique in comparison to MODIFIED SHE–PSO based algorithm are plotted in fig.11 and fig.12 respectively. From the THD analysis it is clear that the harmonic content of the MODIFIED SHE-PSO algorithm is at reduced rate of 1.01% & 0.08% for voltage and current in comparison to 2.18% and 0.11% of LS-PWM voltage and

current. The below results denote the efficiency of the PSO algorithm in terms of voltage and current harmonics, power quality.

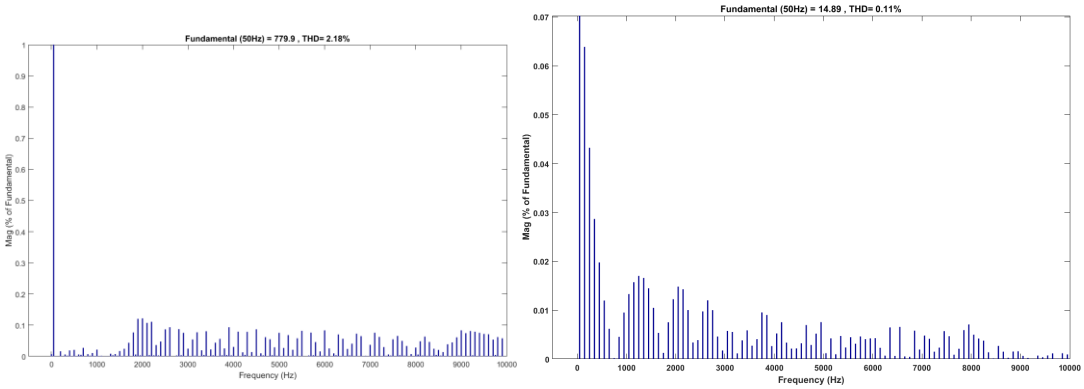


Fig.11 THD of output voltage and current with LS-PWM when modulation index is 1 and load is 50Ω and 50mH

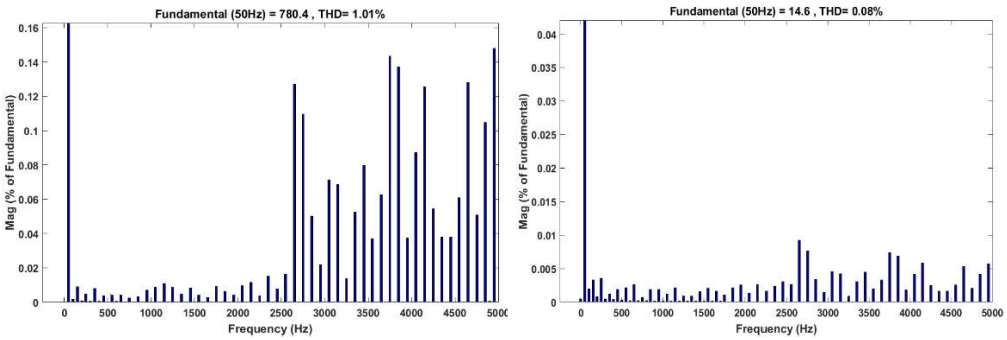


Fig.12 THD of output voltage and current for 53 level inverter with Modified SHE using PSO

The comparison of the THD values of all the simulations are tabulatedin table.3

| parameter | 17 level MLI | | 53 level MLI | |
|---|---|---|---|---|
| | LS-PWM Technique | MODIFIED SHE-PSO Technique | LS-PWM Technique | MODIFIED SHE-PSO Technique |
| **Voltage** | 8.13% | 3.72% | 2.18% | 1.01% |
| **Current** | 0.55% | 0.47% | 0.11% | 0.08% |

Table.3 THD comparison of the proposed simulations

## III. CONCLUSION

In this paper the selective harmonic elimination based PSO algorithm to solve the problem of optimized switching angles and also suppress the higher order harmonics in solving the non-linear transcendental equation.

The simulation models and results are provided for both the MLIs for MODIFIED SHE-PSO in contrast to LS-PWM topology. The results from both the simulations prove that the PSO based MLI generates qualitative power with precisely determined solutions, with very lower harmonics in comparison to LS-PWM technique for both 17 level and 53 level MLI. The output waves denote that the switching angles are optimized with high speed convergence in the system.

## REFERENCES

[1] J. P. Baharu, “Harmonic Reduction of Cascaded H-Bridge Multilevel Inverter Based on Newton-Raphson,” vol. 10, no. 3, pp. 6569–6580, 2015.

[2] M. RaModifiedSHEed, R. Omar, A. Sabari, and M. Sulaiman, “Validation of a Three-Phase Cascaded Multilevel Inverter based on Newton Raphson ( N. R.),” vol. 9, no. May 2016, pp. 1–13

[3]. I. Batsis, D. Bargiotas and A. Daskalopulu, "Switching angles calculation through Mathematical optimization in Multilevel Inverters," 2020 11th International Conference on Information, Intelligence, Systems and Applications (IISA, 2020, pp. 1-4, doi: 10.1109/IISA50023.2020.9284391.

[4]. Nageswara Rao, Jalakanuru and MeseretYenesewKiber, "Switching Angle Calculation By EP HEP HH And FF Methods for Modified 11-Level Cascade H-Bridge Multilevel Inverter", *International Journal of Engineering Science Invention ISSN (Online)*, vol. 6, no. 12, pp. 69-75, December 2017.

[5]. N. V. Kumar, V. K. Chinnaiyan, Pradish M. and M. Divekar, "Enhanced power quality of MLI using PSO based selective harmonic elimination," 2015 International Conference on Green Computing and Internet of Things (ICGCIoT), 2015, pp. 42-47, doi: 10.1109/ICGCIoT.2015.7380425.

[6]. A. Kavousi, B. Vahidi, R. Salehi, M. Bakhshizadeh and N. Farokhnia, "Application of the Bee Algorithm for Selective Harmonic Elimination Strategy in Multilevel Inverters", *IEEE Transactions on Power Electronics*, vol. 27, no. 4, pp. 1689-1696, 2012.

[7]. Agelidis, V.G., Balouktsis, A., Balouktsis, I., Cossar, C.. Multiple sets of solutions for harmonic elimination pwm bipolar waveforms: Analysis and experimental verification. IEEE Transactions on Power Electronics 2006;21(2):415–421.

[8]. Maswood, A., Wei, S., Rahman, M.. A flexible way to generate pwm-Modified SHE switching patterns using genetic algorithm. In: Applied Power Electronics Conference and Exposition, 2001. APEC 2001. Sixteenth Annual IEEE; vol. 2. IEEE; 2001, p. 1130–1134.

[9]. Sayyah, A., Aflaki, M., Rezazade, A.. Optimization of thd and suppressing certain order harmonics in pwm inverters using genetic algorithms. In: Computer Aided Control System Design, 2006 IEEE International Conference on Control Applications, 2006 IEEE International Symposium on Intelligent Control, 2006 IEEE. IEEE; 2006, p. 874–879.

[10]. Sundareswaran, K., Jayant, K., Shanavas, T.. Inverter harmonic elimination through a colony of continuously exploring ants. IEEE Transactions on Industrial Electronics 2007;54(5):2558–2565.

[11]. Kavousi, A., Vahidi, B., Salehi, R., Bakhshizadeh, M.K., Farokhnia, N., Fathi, S.H.. Application of the bee algorithm for selective harmonic elimination strategy in multilevel inverters. IEEE Transactions on power electronics 2012;27(4):1689–1696.

[12]. Kennedy, J.. Particle swarm optimization. In: Encyclopedia of machine learning. Springer; 2011, p. 760–766.

[13]. Azab, M.. Global maximum power point tracking for partially shaded pv arrays using particle swarm optimisation. International Journal of Renewable Energy Technology 2009;1(2):211–235.

[14]. Hereford, J., Siebold, M.. Multi-robot search using a physically-embedded particle swarm optimization. International Journal of Computational Intelligence Research 2008;4(2):197–209.

[15]. Clerc, M., Kennedy, J.. The particle swarm-explosion, stability, and convergence in a multidimensional complex space. IEEE transactions on Evolutionary Computation 2002;6(1):58–73.

[16]. Ramani, K., Krishnan, A.. An estimation of multilevel inverter fed induction motor drive. International Journal of Reviews in Computing 2009;1(1):19–24.

[17]. Kumar, N., Baskaran, J.. Energy management system for hybrid res with hybrid cascaded multilevel inverter. International Journal of Electrical and Computer Engineering 2014;4(1):24.

[18]. R. M. Hossam, G. M. HaModifiedSHEm and M. I. Marei, "Optimized harmonic elimination for cascaded multilevel inverter," 2013 48th International Universities' Power Engineering Conference (UPEC), 2013, pp. 1-6, doi: 10.1109/UPEC.2013.6714984.

[19]. J. Kennedy and R. Eberhart, “Particle swarm optimization,” in Proc. IEEE Int. Conf. Neural Netw., vol. 4. Perth, WA, Australia, 1995, pp. 1942–1948

[20]. E. S. Durak, H. I. Okumus, M. A. Usta and H. Kahveci, "Selective Harmonic Elimination with Particle Swarm Optimization in Multilevel Inverters," 2018 IEEE 18th International Power Electronics and Motion Control Conference (PEMC), 2018, pp. 1019-1024, doi: 10.1109/EPEPEMC.2018.8521959.

[21].H. S. Patel and R. G. Hoft, "Generalized techniques of harmonic elimination and voltage control in thyristor inverters: Part II - Voltage control techniques", *IEEE Trans. Ind. Applicat.*, vol. IA-10, no. 5, pp. 666-673, Sept./Oct. 1974.

[22].H. S. Patel and R. G. Hoft, "Generalized techniques of harmonic elimination and voltage control in thyristor inverters: Part I - Harmonic elimination", *IEEE Trans. Ind. Applicat.*, vol. IA-9, no. 3, pp. 310-317, May/June 1973

[23]. J. N. Chiasson, L. M. Tolbert, K. J. McKenzie and Z. Du, "Elimination of harmonics in a multilevel converter using the theory of symmetric polynomials and resultants", *IEEE Trans. Contr. Syst. Technol.*, vol. 13, no. 2, pp. 216-223, Mar. 2005.

[24].A. Kavousi, B. Vahidi, R. Salehi, M. K. Bakhshizadeh, N. Farokhnia and S. H. Fathi, "Application of the bee algorithm for selective harmonic elimination strategy in multilevel inverters", *IEEE Trans. Power Electron.*, vol. 27, no. 4, pp. 1689-1696, Apr. 2012.

[25].A. Amand, and K.P. Singh, "Selective Harmonics Elimination of PWM Cascaded Multilevel Inverter," International Journal of Engineering Science and Technology (IJEST), Vol. 4, No.06, pp. 2743-2747, June 2012.