Performance Analysis of PV- Based Boost Converter using PI Controller with PSO Algorithm

P.Sabarish*[1], R.Sneha[*2] , G.Vijayalakshmi[*3] ,D.Nikethan[*4]

*[1]*Assistant professor/EEE, K. Ramakrishnan College of Technology, Tiruchirapalli, Tamil Nadu, India*

*[2] *UG student/EEE, K. Ramakrishnan College of Technology, Tiruchirapalli, Tamil Nadu, India*

*[*3]UG student/EEE, K. Ramakrishnan College of Technology, Tiruchirapalli, Tamil Nadu, India*

*[*4]UG student/EEE, K. Ramakrishnan College of Technology, Tiruchirapalli, Tamil Nadu, India*

Abstract : *This paper presents the maximum power point tracking (MPPT) technique for increasing the output voltage of the photovoltaic (PV) system. In order to increase the output voltage of the system, boost converter is connected to the PV system. However, when connecting the boost converter to the PV system the voltage value at the output equal to the input voltage. According to the principle of boost converter, output voltage must be higher than the input voltage. The output voltage depends upon the switching frequency and duty cycle of the converter, as to increase the output voltage of the PV system based on boost converter characteristics. The control strategies can be used based on the combination between the Particle Swarm Optimization (PSO) method and the Proportional Integral (PI) controller that strategies can be extract the maximum power from a PV system. The PI Controller is used to tracking the maximum power from the PV panel, at different atmospheric condition. The Solar PV power generation system is comprised several elements like solar panel, DC-DC converter, MPPT Control Strategies and load. The Simulation result from MATLAB/SIMULINK is presented to verify the performance of the converter.*

Keywords - *Photovoltaic (PV) system; Maximum Power Point Tracking (MPPT); DC-DC Boost Converter; Proportional Integral (PI) and Particle Swarm Optimization (PSO).*

I. INTRODUCTION

In the field of power sector one of the major concerns in these days is day-by- day increase in power demand. But, the quantity and availability of conventional energy sources are not enough to meet up the current day's power demand. While thinking about the future availability of conventional sources of power generation, it becomes very important that the renewable energy sources must be utilized along with source of conventional energy generation systems to fulfill the requirement of the energy demand. In order to overcome current day's energy crisis, one renewable method is to extract power from the incoming sun radiation called Solar Energy, which is globally free for everyone. The solar photovoltaic (PV) is a popular source of renewable energy due to several advantages, notably low operational cost, almost maintenance free and environmentally friendly [1], [2].

In this paper, the PI controller with PSO algorithm is used for boost converter to convert DC to DC voltage. The controlled voltage is used for some application such as battery charging, UPS, etc. The comparator is comparing the reference voltage with output voltage then it will produce the error signal that error signal is given to PI controller. The PI controller is used for controlling the voltage signal after that it will send to PWM generator then the PWM generator is generate the PWM signals for power module. The PSO-based optimization algorithm is used to deal with the different disturbances that can affect the normal operation of the PV panel. The performance of this optimization algorithm is further improved by the introduction of a PI controller that accelerates the rising time and eliminates the steady state error [3]. The PWM generator is used for commutating the duty cycle then the switch is used for close and open operation for boost converter. When the switch is open the inductor gets energized if the switch is closed the energy will goes to diode the diode operates only in forward direction the capacitor is used for removing the ripple component. Then only the constant output voltage is maintained in load side.

II. SOLAR CELL CHARACTERISTICS

The solar cell is mainly made of PV wafers, converts the light energy of solar irradiation into voltage and current directly for load, and conducts electricity without electrolytic effect. The electric energy is obtained from the PN interface of semiconductor directly; therefore, the solar cell is also known as PV cell [4], [5].The equivalent circuit of solar cell as shown in Figure1.

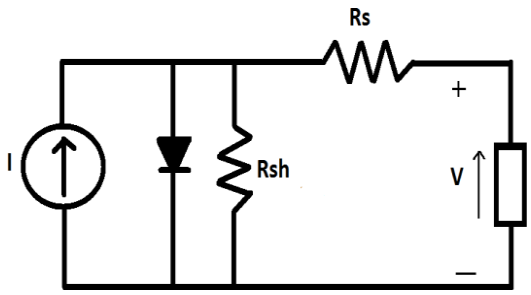

Figure 1: Equivalent Circuit of solar cell

The mathematical model of solar cells in series or parallel connection can be simply expressed as,

$$I_{PV} = I_{ph} - I_{sat}\left(exp\,\frac{q}{BkT}V_{PV} - 1\right) \qquad (1)$$

Where
I_{PV} is output current of solar cell
V_{PV} is output voltage of solar cell
I_{sat} is reverse saturation current of solar cell
I_{ph} is current output of solar cell
q is quantity of electronic charge
k is Boltzmann constant
B is ideal factor of solar cell
T is solar cell surface temperature.

III. BOOST CONVERTER

The DC – DC boost converter is used which consists of boost inductor, diode, MOSFET used as a switch, output filter capacitance and resistive load. When supply voltage is given, inductor current increases when the switch is closed. When the switch is opened, both inductor voltage and supply voltage gets discharged through the load. Hence a higher Voltage at the output is obtained than the given input voltage [6].

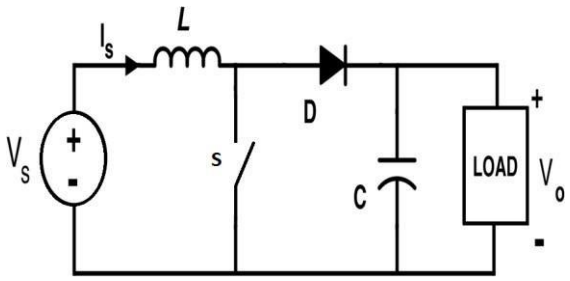

Figure2: Boost converter

The circuit diagram of traditional boost converter is shown in Figure 2. It consists of constant input voltage (Vs). Boost converter is connected between the supply and the load. To maintain constant output voltage a capacitor is connected to the load. The feedback is provided by the controller connected to the output of the boost converter.

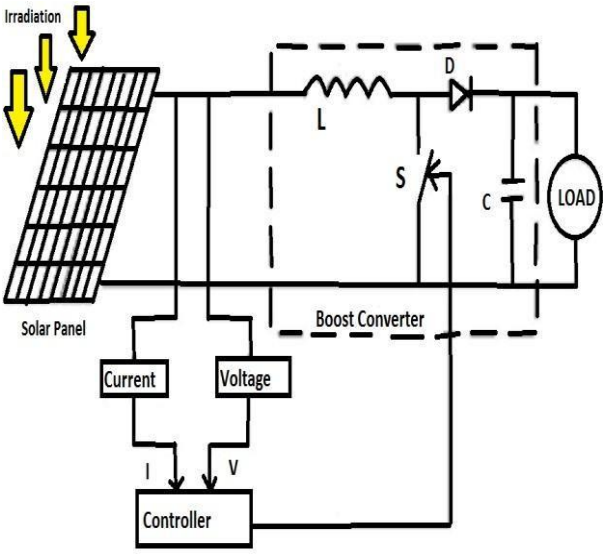

Figure 3: Boost converter with MPPT

The Figure 3 Shows the circuit diagram of boost converter with MPPT. It consists of two main parts they are boost converter and PI controller. Initially the voltage is maintained constantly after that again it feeds to boost regulator through PI controller. The output voltage is given to the comparator that comparator compares the reference voltage and the error signal from the comparator is given to the PI controller, the PI controller control the output voltage[7]. Boost converter is used to convert DC to DC source basically the solar panel is converting light energy into DC voltage. The output voltage is constant by PI controller; it is used to controlling the output voltage. The error signal is getting from comparator. Again the output voltage is continuously getting as a constant output voltage [8]. When the switch is opened the inductor gets charged after closed the switch inductor charge will goes to the diode and the diode only conducted in forward biasing after that capacitor removes the ripple component [9].

IV. MAXIMUM POWER POINT TRACKING

The PV system output power can be increased by using a controller connected to a DC-DC converter for tracking system. However, the Maximum Power Point (MPP) changes with insulation level and temperature due to the nonlinear characteristic of PV modules. Each type of PV module has its own specific characteristic. In general, there is a single point on the V-I or V-P curve is called as MPP, at which the entire PV system operates with maximum efficiency and produces its maximum output power [10]. This point can be located a PV system with MPPT controller has been shown in block diagram of Figure 4.

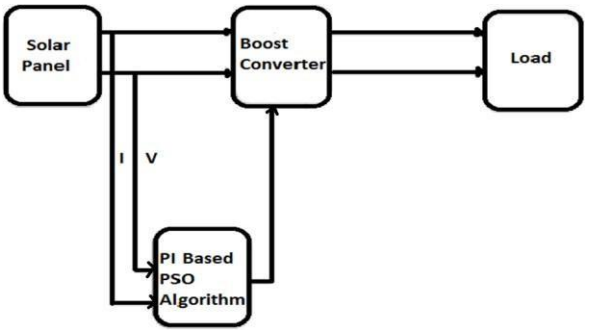

Figure 4: Block diagram

Maximum Power Point Tracker, frequently referred to as MPPT, is an electronic system that operates the PV modules in a manner that allows the modules to produce all the power they are capable of MPPT is not a mechanical tracking system that "physically moves" the modules to make them point more directly at the sun. MPPT is a fully electronic system that varies the electrical operating point of the modules so that the modules are able to deliver maximum available power.

A. PI CONTROLLER

The proportional and Integral controller produces an output signal, u (t) proportional to both input signal, V_i (t) and integral

$$u(t) = K_p V_i(t) + K_i \int V_i(t) \qquad (2)$$

From the MPPT a reference voltage ($V_{ref)}$ is obtained. This V_{ref} is compared with the PV voltage (V_{pv}) and an error signal is obtained and is given to the PI control. By properly selecting the proportional gain (K_p) and integral gain (K_i) the desired response can be obtained. Once boost converter is injected with the power from the PV panel and the PI controller starts function, it varies the value of the duty cycle which will change the input value that is sensed by the PI controller [11].

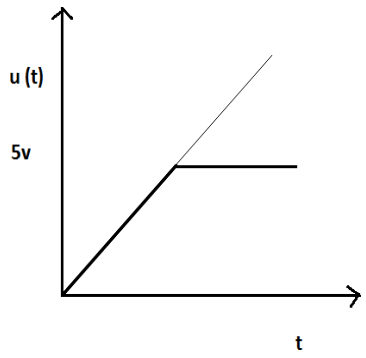

Figure 5: Proportional band (P)

The Figure 5 shows the proportional band of the controller. The process of selecting controller parameter to meet given performance specification is known as controller tuning. Ziegler and Nichols suggested rules for tuning PI controller (mean to set the values of K_p and K_i) based on the experimental step response or based on the value of K_p that result is marginal stability, when only proportional control action is used. Ziegler-Nichols rules, which are briefly presented in the following, are useful when mathematical models of plans are not known. These rules can, of course, be applied to design of system with known mathematical models. Such rules suggest a set of values of K_p and K_i that will give a stable operation of the system. However, the resulting system may exhibit a large maximum overshoot in step response, which is unacceptable [12]. In such a case, we need series of fine tunings until an acceptable result is obtained. In fact, the Ziegler-Nichols tuning rules give an educated guess for parameter values and provide a starting point for fine tuning, greater than giving algorithm the final settings for K_p and K_i in a single shot.

B.PARTICLE SWARM OPTIMIZATION

Proposed in 1995 by Kennedy and Eberhart [13], particle swarm optimization algorithm refers to an optimization approach for the public interest in a society. The basic operational principle of the particle swarm is applicable for the flock of birds or fish or for a group of people. While searching for food, the birds are either dispersed or go together before they locate the place where they can find the food. While the birds are searching

for food from one place to another, there is always a bird that can smell the food very well, that is, the bird can observe the place where the food can be found. Because they are transmitting the information, especially the good information at any time while searching the food from one place to another, getting the good information, the birds will eventually flock to the place where food can be found [14]-[16].

In PSO, each single solution is a "bird" in the search space. We call it "particle". All of particles have fitness values, which are evaluated by the fitness function to be optimized, and have velocities, which direct the flying of the particles. The particles fly through the problem space by following the current optimum particles. When a particle takes part of the population as its topological neighbors, the best value is a local best and is called p-best. Figure 6 shows the flowchart of Particle Swarm Optimization. In the particle swarm optimization algorithm, particle swarm consists of “n” particles, and the position of each particle stands for the potential solution in D-dimensional space. The particles change its condition according to the following three principles:

(1) To keep its inertia

(2) To change the condition according to its most optimist position

(3) To change the condition according to the swarm’s most optimist position

: The general flow chart of PSO can be described as follows

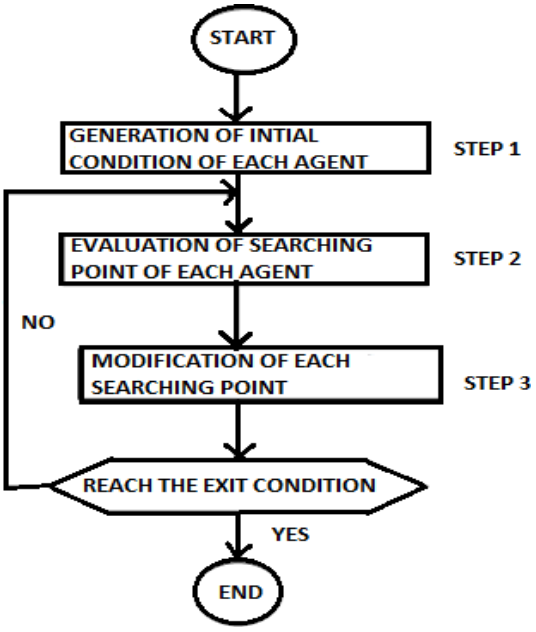

Figure 6: Flow Chart of PSO

Step 1: Generation of initial condition of each agent Initial searching points and velocities of each agent are usually generated randomly within the allowable range. The current searching point is set to p_{best} for each agent. The best-evaluated value of p_{best} is set to g_{best} and the agent number with the best value is stored.

Step 2: Evaluation of searching point of each agent. The objective function value is calculated for each agent. If the value is better than the current p_{best} of the agent, the p_{best} value is replaced by the current value. If the best value of p_{best} is better than the current g_{best}, g_{best} is replaced by the best value and the agent number with the best value is stored.

Step 3: Modification of each searching point. The current searching point of each agent is changed.
Step 4: Checking the exit condition such as maximum number of iteration.

The PSO Algorithm having following advantages such as, (I) PSO is based on the intelligence. It can be applied into both scientific research and engineering use. (II)PSO have no overlapping and mutation calculation. The search can be carried out by the speed of the particle. During the development of several generations, only the most optimist particle can transmit information onto the other particles, and the speed of the researching is very fast. (III)The calculation in PSO is very simple. Compared with the other developing calculations, it occupies the bigger optimization ability and it can be completed easily. (IV) PSO adopts the real number code, and it is decided directly by the solution. The number of the dimension is equal to the constant of the solution.

V. SIMULATION RESULTS

In that model the MOSFET is used as a switch for the best performance of voltage control, fast switching and low losses. Here initially given input supply voltage is 5V. In that supply voltage will be boosted and maintain the constant output voltage in load resistance(R).There are three boost converter parameters are monitoring by using displays. Here the freewheeling diode to maintain the continuous current path in the input supplies. When the MOSFET switch is tuned ON supply voltage is connected to inductor and the inductor current starts to increase and store the energy. When the MOSFET switch is turned OFF, both inductor voltage and supply voltage gets discharged to the load through diode. Hence a higher voltage at the output is obtained than the given input voltage[17]

The simulation circuit is necessary to get the output waveform. In input side we are giving 5V that voltage is getting in output side as 14V. The scope has four signals for PWM, Input voltage, output voltage, load current.

In Figure 7 shows the simulation model of boost converter with PI controller. In that model the IGBT is used as a switch for the best performance of voltage control, fast switching and low losses. Here initially given input supply voltage is 5V. In that supply voltage will be boosted and maintain the constant output voltage in load. There are three boost converter parameters are monitoring by using displays. In that PI controller output is act as the modulation index of the converter[18] The relational operator can be comparing the reference signal to the carrier signal. To set the maximum reference value of PI controller output is 0.6V. When the carrier signal voltage is more than reference voltage that time IGBT go to OFF or 0 states. Otherwise the IGBT maintain the On state.[20]

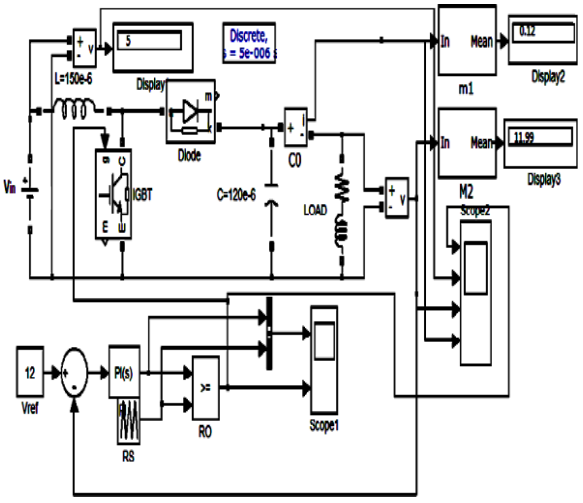

Figure 7: Simulation diagram for boost converter with PI controller

The simulation circuit is necessary to get the output waveform. In input side we are giving 5V that voltage is getting in output side as 12V. For the PWM generation, there are two signals given to the relational operator one from PI controller[19] output signal and other from triangular carrier signal and the relational operator output is PWM signal, that signal is given to the switch. The Figure 8(a) shows the PI controller output and triangular multi carrier signal. The Figure 8(b) shows the PWM pulses for switch. Figure 9(a), (b), (c) and (d) show the PWM pulses, Input voltage, output voltage, load current of the boost converter.

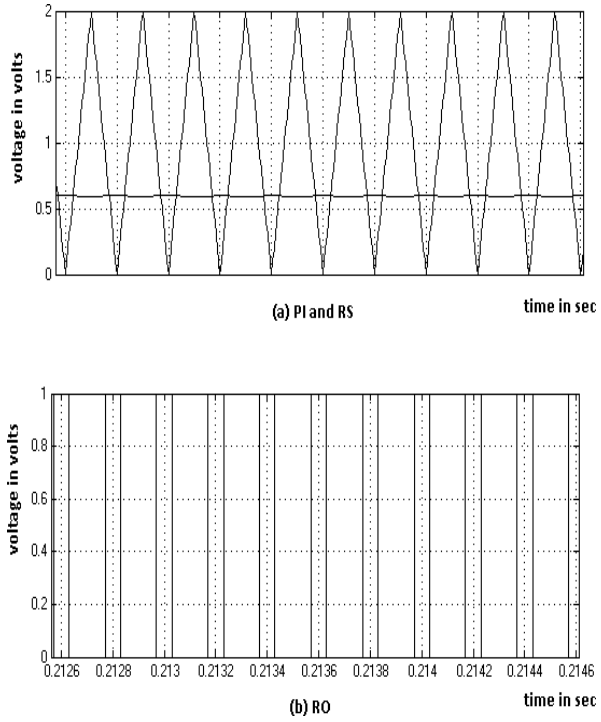

Figure 8: PWM Generation (a) PI and (b) PWM Pulses and Triangular multicarrier

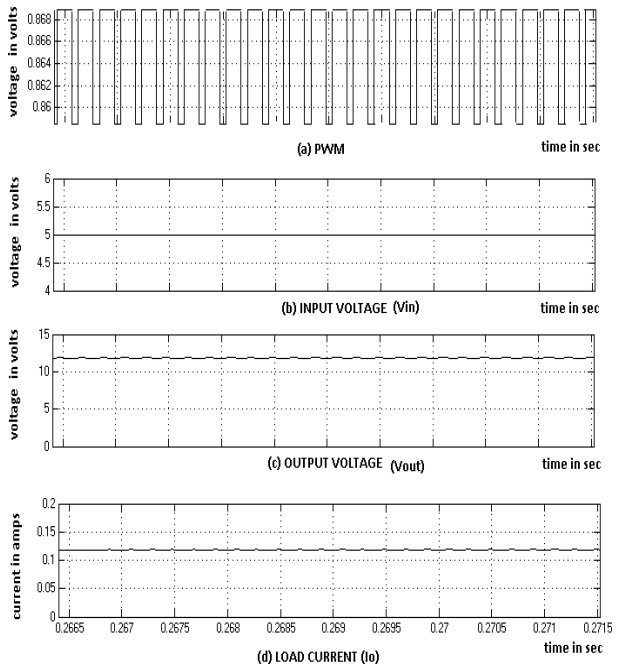

Figure 9: Simulation results for boost converter with PI controller (a)PWM , (b)Input Voltage, (c)Output Voltage and(d)Load Current

VI. CONCLUSION

This paper presents PI controller with particle swarm optimization are used to obtain the maximum power of a PV system. By using this control strategies gives a number of advantages such as, It has a faster tracking speed , It exhibits zero oscillations at the MPP , It could locate the MPP for any environmental variations and the algorithm can be easily developed using a low-cost microcontrollers. The PI controller is used to achieve less response time and eliminate the steady state error. The PV system with an intelligent MPPT has been modeled using MATLAB/SIMULINK. The entire PV system is simulated and simulation results are verified. The maximum power point tracker tracks the MPP and the boost converter boosts the output voltage from the solar panel to the maximum power point voltage thus improving the efficiency of the panel.

REFERENCES

[1] Kashif Ishaque, Zainal Salam, Muhammad Amjad, and Saad Mekhilef,"An Improved Particle Swarm Optimization (PSO)–Based MPPT for PV With Reduced Steady-State Oscillation", IEEE Transactions on power electronics, vol. 27, no. 8, Pp.3627 – 3638, 2012.

[2] Zhao Chaohui, "Emerging Technology: Photo-Voltage Generation Status and Trends", Journal of Shanghai Dianji University, vol.11, no.2, Pp. 104-109, 2008.

[3] N. Boutasseta, "PSO-PI based Control of Photovoltaic Arrays" International Journal of Computer Applications, Vol, No.17, pp.36-40, 2012.

[4] R. Gules, J. D. P. Pacheco, H. L.Hey, and J. Imhoff,"A maximum power point tracking system with parallel connection for PV stand-alone applications, "IEEE Transactions on Industrial Electronics,vol. 55, no.7, pp. 2674 2683, 2008.

[5] J.M. Kwon, B. H. Kwon, and K. H. Nam,"Grid-connected photovoltaic multistring PCS with PV current variation reduction control," IEEE Transactions on Industrial Electronics, vol. 56, no. 11, pp. 4381–4388, 2009.

[6] Rajendra Meena, "Simulation Study of Boost Converter with Various Control Techniques" International Journal of Science and Research, Volume 3 Issue 9, pp.74-79, 2014.

[7] R.Nagarajan and M,Saravanan. "Performance Analysis of a Novel Reduced Switch Cascaded Multilevel Inverter," Journal of Power Electronics, Vol.14, No.1, pp.48-60. 2014.

[8] R. Nagarajan, S.Sathiskumar, K.Balasubramani, C.Boobalan, S.Naveen, and N.Sridhar, "Chopper Fed Speed Control of DC Motor Using PI Controller," IOSR, Journal of Electrical and Electronics Engineering (IOSR-JEEE) vol. 11, no. 3, pp. 65–69, 2016.

[9] R.Nagarajan and M, Saravanan, "Comparison of PWM Control Techniques for Cascaded Multilevel Inverter" International Review of Automatic control, Vol.5 No.6, pp. 815-828. 2012.

[10] Govind Anil, Nirmal Murugan, Mufeed Ubaid, "PI Controller based MPPT for a PV System", IOSR Journal of Electrical and Electronics Engineering, Volume 6, No.5, pp,10-15, 2013.

[11] Nazar Ali, A. "Performance Analysis of Switched Capacitor Multilevel DC/AC Inverter using Solar PV Cells." International Journal for Modern Trends in Science and Technology 3.05 (2017): 104-109.

[12] Ali, A.Nazar. "FPGA UTILISATION FOR HIGH LEVELPOWER CONSUMPTION DRIVES BASEDONTHREE PHASE SINUSOIDAL PWM -VVVF CONTROLLER." International Journal of Communications and Engineering 4.Issue: 02 (2012): 25-30.

[13] ali, A.Nazar. "A SINGLE PHASE HIGH EFFICIENT TRANSFORMERLESS INVERTER FOR PV GRID CONNECTED POWER SYSTEM USING ISPWM TECHNIQUE." International Journal of Applied Engineering Research 10.ISSN 0973-4562 (2015): 7489-7496.

[14]JAIGANESH, R. "Smart Grid System for Water Pumping and Domestic Application using Arduino Controller." International Journal of Engineering Research & Technology (IJERT) 5.13 (2017): 583-588.

[15]Pau1l, M. Mano Raja, R. Mahalakshmi, M. Karuppasamypandiyan, A. Bhuvanesh, and R. Jai Ganesh. "Classification and Detection of Faults in Grid Connected Photovoltaic System."

[16] Ganesh, Rajendran Jai, et al. "Fault Identification and Islanding in DC Grid Connected PV System." Scientific Research Publishing 7.Circuits and Systems, 7, 2904-2915. (2016): 2904-2915.

[17] Jaiganesh, R., et al. "Smart Grid System for Water Pumping and Domestic Application Using Arduino Controller." International Journal for Modern Trends in Science and Technology 3.05 (2017): 385-390.

[18] Kalavalli,C., et al. "Single Phase Bidirectional PWM Converter for Microgrid System." International Journal of Engineering and Technology (IJET) ISSN : 0975-4024 Vol 5 No 3 Jun-Jul 2013.

[19] Lilly Renuka, R., et al. "Power Quality Enhancement Using VSI Based STATCOM for SEIG Feeding Non Linear Loads. " International Journal of Engineering and Applied Sciences (IJEAS) ISSN: 2394-3661, Volume-2, Issue-5, May2015.

[20] Raguraman, L., and P. Sabarish. "Integrated Bridgeless PWM Based Power Converters." International Journal of Advanced Research in Engineering & Technology (IJARET) 4.5 (2013): 17-23.