Control Strategy for Hybrid-STATCOM with Extensive Compensation Range & Low DC Link Voltage

Mr. Rajesh R. Waghulde[1] , Prof. S. M. Shembekar[2]
[1] Research Scholar, SSBT's COET, Bambhori, Jalgaon
[2] Asst. Professor, SSBT's COET, Bambhori, Jalgaon

Abstract:- The hybrid-STATCOM consists of an active inverter part and a thyristor controlled LC part (TCLC). The TCLC part provides a great voltage drop between the system voltage and the inverter voltage and wide reactive power compensation range. A small DC-link voltage level the active inverter part can continue to operate. To select the performances of the TCLC small rating of the active inverter part is used for riveting the harmonic currents generated, avoiding mistuning of the firing angles, and preventing the resonance problem. The system costs can be significantly condensed because of these characteristics. To allow operation under different voltage and current conditions, such as unbalanced current, voltage dip, and voltage fault the Hybrid STATCOM is used. For the individual characteristics of a great wider compensation range and a much lower DC-link voltage a hybrid-STATCOM is introduced. The system constraint design is then proposed on the basis of consideration of the reactive power compensation range and prevention of the potential resonance problem.

Keywords— Hybrid-STATCOM, low dc-link voltage, STATCOM, wide compensation range

1. INTRODUCTION

The Modern power distribution system is becoming highly susceptible to the different power quality problems. The widespread use of nonlinear loads is further contributing to increased current and voltage harmonics issues. To maintain the controlled power quality regulations, some kind of compensation at all the power levels is becoming a common practice[1]. At the distribution level, STATCOM is a most attractive solution to compensate several major power quality problems. Important issue in the control of distribution systems is reactive power compensation. Reactive current reduces the system power factor, reduce in size the active power capacity increases the distribution system losses,and can cause large amplitude variations in the load-side voltage. Static VAR compensators (SVCs) are traditionally used to dynamically compensate reactive currents as the loads vary from time to time. However, SVCs suffer from many problems, like quality problems, harmonic current injection, and slow response [2]-[3]. To overcome these disadvantages with faster response, active power filters (APFs) and static synchronous compensators (STATCOMs) were developed for reactive current compensation, less harmonic current injection, and better performance [4]. However, the STATCOMs usually require multilevel structures in a medium- or high-voltage level transmission system to reduce the high-voltage stress across each power switch and DC-link capacitor, which increases the control complexity, extend the initial and operational costs of the system.

Many different control techniques have been proposed to improve the operating performances of the traditional STATCOMs, C-STATCOMs, and other PPF-STATCOMs, , A hybrid combination structure of PPF in parallel with STATCOM was proposed to reduce the current rating of the STATCOMs or APFs. However, this hybrid compensator is allocated for inductive loading operation. When it is applied for capacitive loading compensation, it easily loses its small active inverter rating characteristics[5]. In this hybrid structure, the APF is controlled to reduce the harmonics and compensate for the small amounts of load reactive and unbalanced power left by the SVC.

To overcome the limitation of different reactive power compensators [5] for transmission systems, proposed a hybrid-STATCOM that consists of a thyristor-controlled LC part (TCLC) and

an active inverter part, as shown in Figure. 1. The TCLC part provides a large voltage drop between the system voltage and the inverter voltage so that the active inverter part and wide reactive power compensation range can continue to operate at a low DC-link voltage level[6]. By absorbing the harmonic currents generated by the TCLC part, avoiding mistuning of the firing angles, and preventing the resonance problem the small rating of the active inverter part is used[7]. The contributions of this paper are summarized as follows:

A hybrid-STATCOM is proposed, with the distinctive characteristics of a much wider compensation range than C-STATCOM and other series-type PPF-STATCOMs and a much lower DC-link voltage than traditional STATCOM and other parallel-connected hybrid STATCOM[7][8].

To provide a clear view of the advantages of hybrid-STATCOM in comparison with traditional STATCOM V-I characteristic is analyzed. This parameter design method is proposed based on prevention of the potential resonance problem, and avoidance of mistuning of firing angle and consideration of the reactive power compensation range.

A hybrid-STATCOM is proposed, with the distinctive characteristics of a much wider compensation range than C-STATCOM and other series-type PPF-STATCOMs and a much lower DC-link voltage than traditional STATCOM and other parallel-connected hybrid STATCOMs

The advantages of hybrid-STATCOM in comparison with traditional STATCOM and V-I characteristic is analyzed in this paper. This parameter design method is proposed based on prevention of the potential resonance problem, and avoidance of mistuning of firing angle and consideration of the reactive power compensation range[9].

A new control strategy for hybrid-STATCOM is proposed to synchronize the TCLC part and the active inverter part for reactive power compensation under different voltage and current conditions, like unbalanced current, voltage fault, and voltage dip. After simulation and experimental results, the wide compensation range and low dc-link voltage characteristics and the dynamic performance of Hybrid STATCOM will prove .

Hybrid STATCOM offers lower total losses, superior eventuality handling and easy extension of dynamic range,

2. CIRCUIT CONFIGURATION OF THE HYBRID-STATCOM

The circuit description of hybrid-STATCOM is shown in Figure. 1, in which the “x” stands for phase a, b, and c. The source and load voltages are V_{sx} and V_x are; isx, i_{Lx}, and i_{cx} are the source, load, and compensating currents, correspondingly. L_s is the transmission line impedance. With TCLC and an active inverter part the hybrid-STATCOM is made . The TCLC affords inductive and capacitive reactive power repayment range which is controlled by means of the firing angles of the thyristors[1]. It provides a large reactive power compensation range and a large voltage drop between the system voltage and the inverter voltage so that the active inverter part may continue to operate at a low DC-link voltage level. The active inverter component consists of a voltage source inverter with a DC-link capacitor Cdc, and the small rating active inverter component is used to enhance the overall performance of the TCLC part. The small score of the active inverter part is used to enhance the performances of the TCLC component via soaking up the harmonic currents generated with the aid of the TCLC element, heading off mistuning of the firing angles, and preventing the resonance problem.

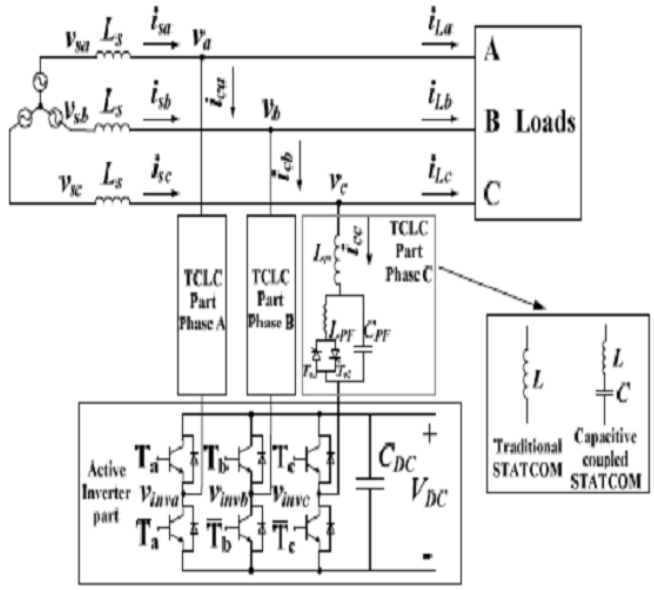

Figure 1: Circuit configuration of the hybrid-STATCOM

3. CONTROL STRATEGY OF HYBRID STATCOM

A. TCLC part control

To enhance its response time, the TCLC part manage is based totally at the instant pq theory [10]. The TCLC part is on the whole used to compensate the reactive cutting-edge with the controllable TCLC component impedance XTCLC.

Referring to $V_{ikvx} = V_x + X_{TCL}(\alpha_x) I_{Lqx}$

To obtain the smallest amount inverter voltage Vinvx $\tilde{=}$ 0, X_{TCLC} can be calculated with Ohm's law in terms of the RMS values of the load voltage (Vx) and the load reactive current (I_{Lqx}). However, to compute the X_{TCLC} in real time, the expression of X_{TCLC} can be rewritten in terms of instantaneous values as

$$X_{TCLC} = \frac{V_x}{I_{Lqx}} = \frac{\overline{\|V\|^2}}{\sqrt{3}.\,\overline{q}_{Lx}} \tag{1}$$

Where $\|\bar{\bar{V}}\|$ the average of the three is-phases instantaneous load voltage and $\overline{q_{Lx}}$ is the DC component of the phase reactive power[9]. The real-time expression of $\|\bar{\bar{V}}\|$ and $\overline{q_{Lx}}$ can be obtained by subsequent equation with low-pass filters.

$$\|v\| = \sqrt{v_a^2 + v_b^2 + v_c^2} \tag{2}$$

$$\begin{bmatrix} q_{La} \\ q_{Lb} \\ q_{Lc} \end{bmatrix} = \begin{bmatrix} v_{b.i_{Lc}} - V_{c.i_{Lb}} \\ v_{c.i_{La}} - V_{a.i_{Lc}} \\ v_{a.i_{Lb}} - V_{b.i_{La}} \end{bmatrix} \tag{3}$$

In above equation V_x and q_{Lx} are the instant load voltage and the load reactive power, repectively[10]. As shown in Figure.1, a limiter is useful to limit the calculated XTCLC in within the range of XTCLC >$X_{ind(min)}$ and XTCLC

$$X_{TCLC}(\alpha_x) = \frac{X_{TCR}(\alpha_x) X_{C_{PF}}}{X_{C_{PF}} - X_{TCR}(\alpha_x)} + X_{LC}$$
$$= \frac{\pi X_{L_{PF}} X_{C_{PF}}}{X_{C_{PF}}(2\pi - 2\alpha_x + \sin 2\alpha_x) - \pi X_{L_{PF}}} + X_{LC} \tag{4}$$

B. Active inverter part control

In the proposed control strategy, the instantaneous active and reactive current id-iq method is implemented for the active inverter part to get better the overall performance of hybridSTATCOM under different voltage and current conditions, such as balanced and unbalanced and voltage fault. The active inverter part is used to improve the TCLC part characteristic by preventing the compensating current icx to its reference fee icx* simply so the mistuning problem, the resonance problem, and the harmonic modern injection problem can be averted. The icx* is designed with the aid of making use of the id-iq method due to the fact it is legitimate for distinctive voltage and current conditions The calculated icx* contains reactive power, unbalanced power, and current harmonic components[11][12][13]. By calculating the compensating current icx to track its reference icx*, the active inverter part can cmpensate for the load harmonic currents and enhance the reactive strength reimbursement ability and performance of the TCLC element beneath numerous voltage situations[14][15]. The icx* can be calculated as

$$\begin{bmatrix} i_{ca}^* \\ i_{cb}^* \\ i_{cc}^* \end{bmatrix} = \sqrt{\frac{2}{3}} \cdot \begin{bmatrix} 1 & 0 \\ -1/2 & \sqrt{3}/2 \\ -1/2 & -\sqrt{3}/2 \end{bmatrix} \begin{bmatrix} \cos\theta & -\sin\theta \\ \sin\theta & \cos\theta \end{bmatrix} \cdot \begin{bmatrix} \tilde{i}_d \\ i_q \end{bmatrix} \tag{5}$$

Where i_d and i_q are the instantaneous active and reactive current, which contain DC components $\bar{i}_d$ and $\bar{i}_q$, and AC components $\tilde{i}_d$ and $\tilde{i}_q$, $\tilde{i}_d$ is obtained by transient id through a high-pass filter. i_d & i_q Are obtained by

$$\begin{bmatrix} i_d \\ i_q \end{bmatrix} = \begin{bmatrix} \cos\theta_a & \sin\theta_a \\ -\sin\theta_a & \cos\theta_a \end{bmatrix} \begin{bmatrix} i_\alpha \\ i_\beta \end{bmatrix} \tag{6}$$

In above equation, the currents (i_α and i_β) in $\alpha - \beta$ plane are transformed from a-b-c frames by,

$$\begin{bmatrix} i_\alpha \\ i_\beta \end{bmatrix} = \begin{bmatrix} 1 & -1/2 & -1/2 \\ 0 & \sqrt{3}/2 & -\sqrt{3}/2 \end{bmatrix} \begin{bmatrix} i_{La} \\ i_{Lb} \\ i_{Lc} \end{bmatrix}. \tag{7}$$

Where, i_{Lx} is the load current signal.

C. Response Time of Hybrid-STATCOM

The TCLC part has two back to back back connected thyristor in every phase which are triggered alternately in every half cycle, so that to control duration of the TCLC part is one cycle (0.05s). The proposed hybrid-STATCOM shape connects the TCLC part in collection with a right away operated active inverter part, which could extensively improve its overall reaction time. With the proposed controller, the active inverter part can restriction the compensating current icx to its reference value icx* through pulse width modulation (PWM) manage, and the PWM manage frequency is set to be 12.5 kHz[14]. During the transient state, the response time of hybridSTATCOM can be separately discussed in the following two cases.

A) If the load reactive power is dynamically converting within the inductive range the reaction time of hybrid-STATCOM can be as fast as traditional STATCOM.

B) In evaluation, when the load reactive strength modifications from capacitive to inductive or vice versa, the hybrid STATCOM might also take about one cycle to settle down. The proposed hybrid STATCOM can be considered as a fast response reactive power compensator wherein the dynamic performances of hybrid-STATCOM will show through way of the simulation result.

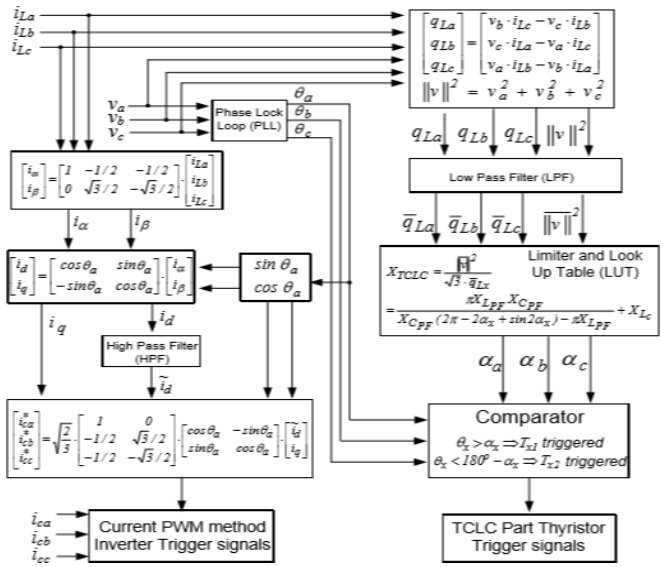

Figure 2. Control strategy for hybrid STATCOM

4. PERFORMANCE ANALYSIS

In this section, the simulation results between traditional STATCOM,and the proposed hybrid-STATCOM are discussed and compared. The previous discussions of the essential inverter for these three STATCOMs are also verified by simulations. The simulation studies are conceded out with MATLAB. When the loading is inductive and light, traditional STATCOM requires a high dc-link voltage for compensation. The Matlab simulation of traditional and hybrid STATCOM consist of voltage source of 400v then source resistance of 0.04 Ω and impedance of 0.02mH The Matlab simulation of traditional STATCOM and hybrid STATCOM consist of three phase voltage source is connected to load. The three different loads are used.

1. Capacitive loading
2. Light Inductive loading
3. High Inductive loading

A. Simulation model of Traditional STATCOM

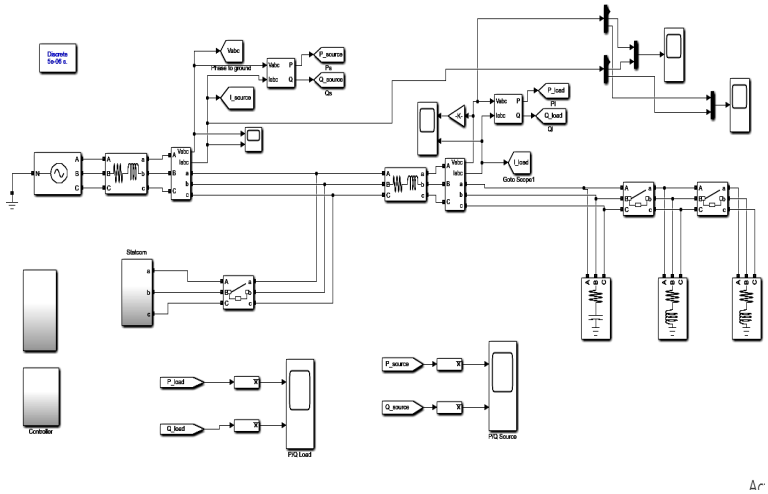

Figure 3. Simulation model of Three Phase System Traditional STATCOM

B. Simulation model of Hybrid STATCOM

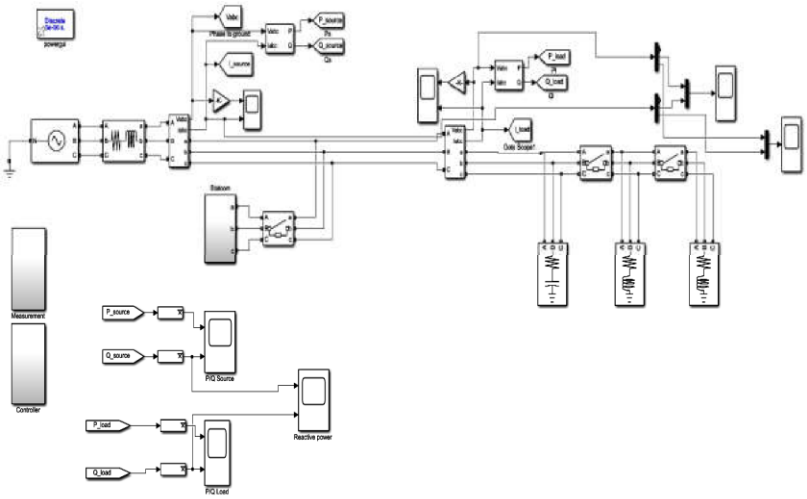

Figure 4. Simulation model of Three Phase System with Hybrid STATCOM

5. EXPERIMENT RESULTS AND DISCUSSION

The objective of the experiment results is to verify that the proposed hybrid-STATCOM has the characteristics of a wide compensation range and low dc-link voltage under different voltage and current conditions.Following are the standard grid parameters with considering line voltage, line Resistance, line inductance, and frequency which are shown by Ttable 1. And Table 2 shows the output values of total harmonics distortion (THD) according to change with load.

Table 1. Three Phase Transmition Line Grid Parameter

Sr. No	Parameter	Value
1	Line Voltage	400V
2	Line Resistance	0.04Ω
3	Line Inductance	0.02mH
4	Frequency	50Hz

Table 2. Output Values of THD According to Load

Sr. No	Load	STATCOM	THD
1	5kW 400VAR	Traditional	38.38%
2	5Kw 400VAR	Hybrid	17.43%

6. GRAPHICAL REPRESENTATION

A. Graphical Representation of Power Measure at Source Side

The below figure shows the graphical result of power measure at source side. We observed that before the time of 1second in which STATCOM connected in grid the active power which peak to load is increases and reactive power which fed by load is decreases.

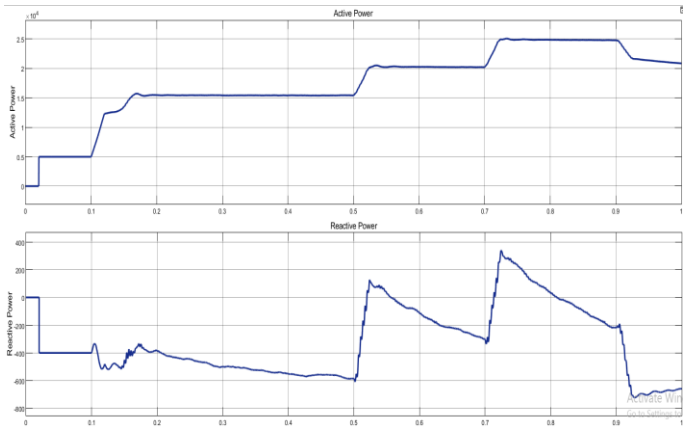

Figure 5. Graphical Representation of Power Measure at Source side

B. Graphical Representation Power Measure at Load Side

The below fig shows the graphical results of power measure at load side. After we compensating the reactive power into the system we measured the load power. We apply the load of 5kw,400var find the active and reactive power.

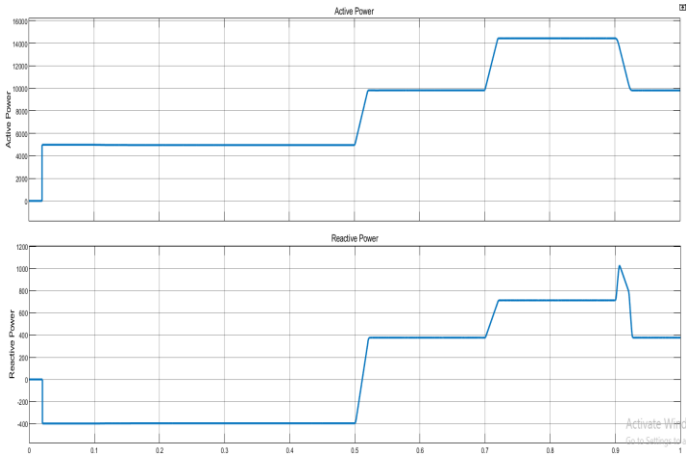

Figure 6.Graphical Representation of Power Measure at Load Side

C. Graphical Representation of Power Injected by Hybrid STATCOM

The below Figure. shows the graphical representation of Power injected by hybrid Statcom. The STATCOM injected reactive power in system. When it connected to grid it inject 5kw in grid.

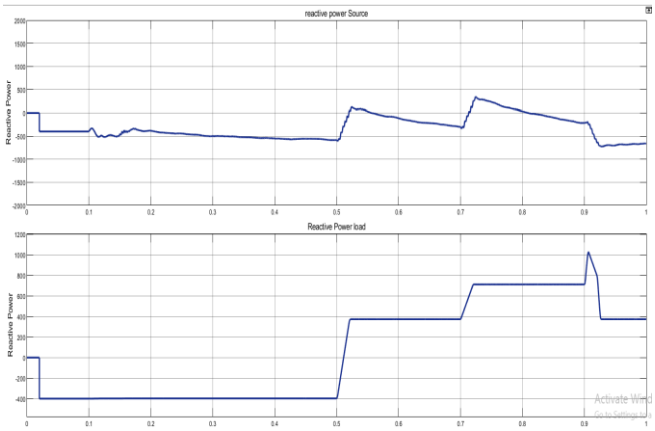

Figure 7.Graphical representation of Power injected by hybrid STATCOM

But at this time the huge problem of harmonics is created in grid system.so our main objectives are to inject reactive power and remove harmonics from the system. Therefore we consider the following case, In this case when we apply the load of 5kw 400 Var this time the traditional Statcom is used the Total harmonic distortion (THD) of 38.38% and hybrid Statcom used the Total harmonic distortion (THD) of 17.39%. From this both results we find that hybrid Statcom reduced the total harmonic distortion Which is shown by the below figure.

A. Traditional STATCOM

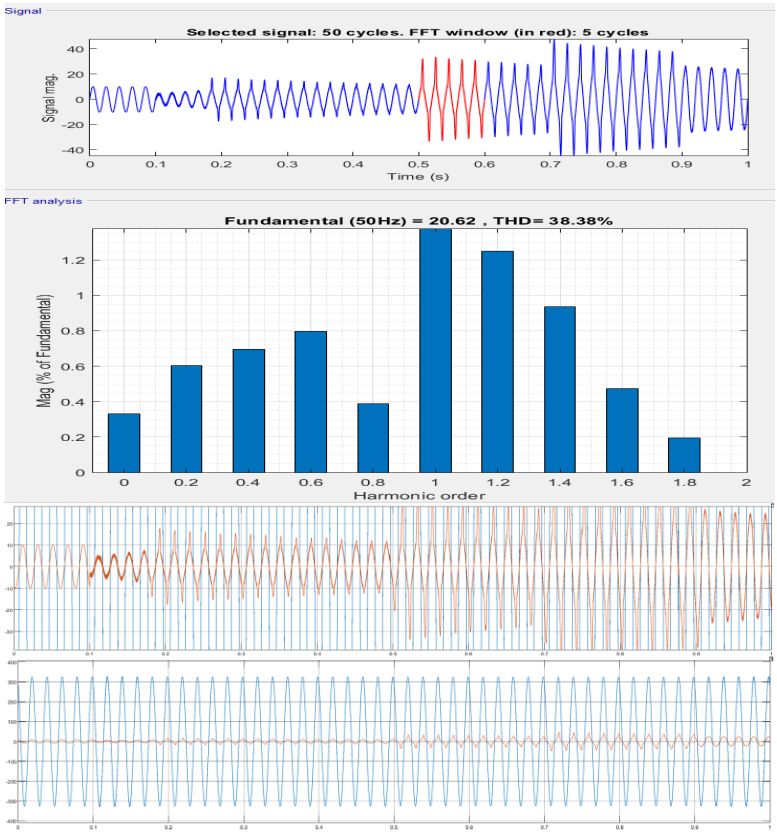

Figure.8.Graphical representation of traditional Statcom with THD 38.38%and Dynamic compensation waveforms of by applying traditional Statcom under different loadings cases

B. Hybrid STATCOM

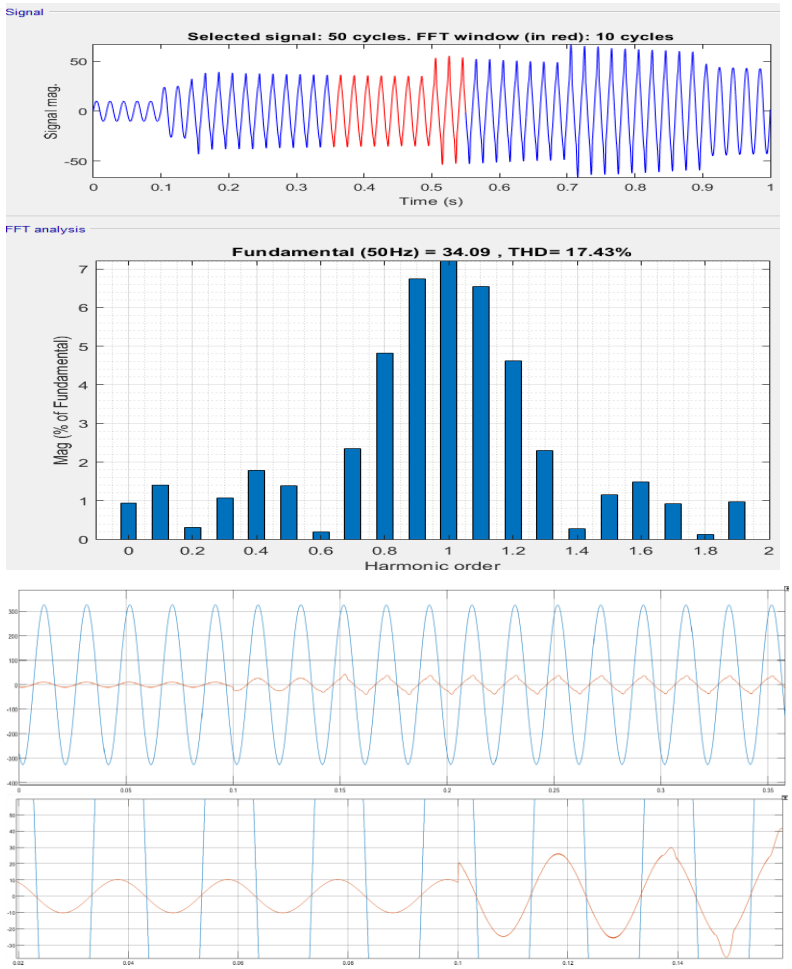

Figure 9.Graphical representation of Hybrid STATCOM with THD 17.43%and Dynamic compensation waveforms of by applying Hybrid STATCOM under different loadings cases

CONCLUSION

A hybrid-STATCOM in three-phase power system is projected and discussed as a cost-effective reactive power compensator for medium voltage level application. Simulation of hybrid-STATCOM for three different load (light inductive, highly inductive and capacitive) is completed using MATLAB simulink. From the simulation, the concept of hybrid-STATOM is understood. Its parameter design method is anticipated on the basis of consideration of reactive power compensation range & prevention of potential resonance problem. The TCLC part improves the reactive power compensation range & LC is designed to avoid the resonance problem. Active inverter part is designed to avoid the mistuning of firing angle of TCLC part. Moreover, the control strategy of the hybrid-STATCOM is developed under diverse voltage and current condition. The response time of hybrid STATCOM is faster than other conventional reactive power compensator. Hybrid STATCOM obtains the best performance under both inductive and capacitive loading.

REFERENCES

[1] Lei Wang, Chi-Seng Lam, Member, IEEE, and Man-Chung Wong, Senior Member, IEEE, " A Hybrid-STATCOM with Wide Compensation Range and Low DC-Link Voltage", 0278-0046 (c) 2015 IEEE.

[2] AzmeraSandeep , P C Panda&Sandeepkumar N "Study of Hybrid Active Power Filter for Power Quality Improvement" International Conference on Computer Science, Electronics and Communication Engineering-ICCECE ,ISBN: 978-3-642-24819-10,27th April 2014.

[3] V. Hild, L. Kirschner, G. Pilz, L. Peuter, and B. Gemmell, "The best of both–combining statcom with conventional thyristor based static var compensator technology," in *EPRI Conference*, 2013.

[4] F. Shahnia, S. Rajakaruna, And A. Ghosh, "Static Compensators (Statcoms) In Power Systems", Springer, 2015.

[5] M.-C. Wong, C.-S. Lam, and N.-Y. Dai, "Capacitive-coupling STATCOM and its control," Chinese Patent for Invention, Granted, No. 200710196710.6, May 2011.

[6] L. Wang, C.-S. Lam, and M.-C. Wong, "A hybrid-statcom with wide compensation range and low dc-link voltage," *IEEE Transactions on Industrial Electronics*, vol. 63, no. 6, pp. 3333–3343, 2016.

[7] S. Hu, Z. Zhang, Y. Chen et al., "A new integrated hybrid power quality control system for electrical railway," IEEE Trans. Ind. Electron., vol. 62, no. 10, pp. 6222–6232, Oct. 2015

[8] K.-W. Lao, N. Dai, W.-G. Liu, and M.-C. Wong, "Hybrid power quality compensator with minimum dc operation voltage design for high-speed traction power systems," IEEE Trans. Power Electron., vol. 28, no. 4, pp. 2024–2036, Apr. 2013. [

[9] A. Varschavsky, J. Dixon, M. Rotella, and L. Moran, "Cascaded nine-level inverter for hybrid-series active power filter, using industrial controller," IEEE Trans. Ind. Electron., vol. 57, no. 8, pp. 2761–2767, Aug. 2010.

[10] V. Soares and P. Verdelho, "An instantaneous active and reactive current component method for active filters," IEEE Trans. Power Electron., vol. 15, no. 4, pp. 660–669, Jul. 2000.

[11] L. Gyugyi, R. A. Otto, and T. H. Putman, "Principles and applications of static thyristor-controlled shunt compensators," IEEE Trans. Power App.Syst., vol. PAS-97, no. 5, pp. 1935–1945, Sep./Oct. 1978.

[12] T. J. Dionise, "Assessing the performance of a static VAR compensator for an electric arc furnace," IEEE Trans. Ind. Appl., vol. 50, no. 3, pp. 1619–1629, May/Jun. 2014. [

[13] K.Nagaraju, 2v.Surekha, "A New Control Strategy For Hybrid Statcom With Wide Compensation Range And Low Dc Link Voltage", Indian J.Sci.Res. 17(2): 72-84, 2018, Issn: 0976-2876 (Print), Issn: 2250-0138(Online).

[14] Tc Demirdelen, Tumaym. Mustafaa New Control Approach For Shunt Hybrid Active Power Filter To Compensate Harmonics and Dynamic Reactive Power with Grid Interconnection , IEEE European Modelling Symposium (2015).

[15] Aaliya Bai.S , Mr. T. Rajesh, Santhosh Kumar.V, "Design and Implementation of Hybrid Active Power Filters For Power Quality Improvement in Industrie, Volume : 5, Issue : 1,pp-143-146, 01/04/2017.