PWM BASED SINGLE PHASE MATRIX CONVERTER FOR HIGH FREQUENCY INDUCTION HEATING

K.V.Divya sree[1], G.Mahesh[2] ,SK.Ruksana[3]

Assistant professor[1] of Department of EEE-Vasavi collage of engineering , Hyderabad ,TS ,India
Assistant professor[2] of Department of EEE-Vasavi collage of engineering , Hyderabad ,TS ,India

M.Tech student[3] in power systems and power electronics ,Department of EEE , Vasavi collage of engineering, Hyderabad ,TS ,India.

ABSTRACT

Conventional converters employing for induction heating are mostly DC-link converters which consists of an rectifier at the initial stage and rectified dc is fed to the inverter which converts dc to ac.The above described converter will undergo a two stage process which leads to certain losses.Hence there is a need for a converter which converts direct ac-ac with higher frequencies for the purpose of induction heating.The need for the direct converter has motivated to develop a matrix converter induction heating.The operating principles along with the proposed features are explained here with the simulated results.

Keywords— induction heating,matrix converter,DC-link converter.

I.INTRODUCTION

The process involved in induction heating is an non-contact process. It uses a high frequency electricity inorder to heat the element or work piece.As it is non-contact in process it does not contaminate the material under subject.On contrast with the other heating techniques which employs a flame and then the generated heat is applied to the work piece, it is a very efficient process of heating.Induction heating requires an AC input voltage of high frequency of about few khz range.Conventional methods which acts as an input to the induction heating uses a AC-DC-AC topology.Initially a rectifier takes the input ac voltage supply and converts it in to dc which becomes the input for the inverter which converts dc voltage into required ac voltage.In this dc-link converter it employs a bulkier storage element.Single phase matrix converter can be used for stepup or step down of frequency.It has been introduced by Zukerberger in 1997.[1] Generally ,a matrix converter is an device which consists of mxn bidirectional power switches which connects an 'm' phase voltage source to an 'n' phase. Single phase matrix converter is an improved version of cycloconverters and it can be recognized as an universal converter where input voltage of any frequency can be converted to output voltage of any desired frequency. It has inherent bi-directional power flow capability and input power factor can be fully controlled.Due to the absence of a capacitor midst the conversion, single phase matrix converter has reduced bulky energy storage elements in it's circuit which will improve its advantages.Hence a rectifier, inverter, chopper and cyclo-converter operations can be performed by a single circuit of single phase matrix converter. Whereas in an cycloconverter ,thyristors are used for conversion but in matrix converters a fast switching IGBTs are used for its operation. Variable voltage and variable frequency can be achieved

by using a single phase matrix converter.It is an all silicon-solution.It is an substitute for a PWM DC-link converter.

II. SINGLE PHASE MATRIX CONVERTER

The single phase matrix converter is a direct ac to ac conversion device which is directly connected to the load without any intermediate stage conversion midst which requires a bulky capacitor. In an dc-link converter, it requires more extra components as compared to single phase matrix converter. Matrix converter uses bi-directional switches in order to achieve automatic conversion of power from ac to ac. It provides sinusoidal input and output waveforms with minimum higher order and no sub-harmonic components .Single phase matrix converter has several advantages of input power factor control, simple algorithm ,no reactive elements ,good power quality etc when compared with the other power electronic converters. There is negligible requirement of any power quality improvement devices.

It consists of four controlled bidirectional switches forming a 2x2 matrix hence the name matrix converter.Since monolithic bidirectional switches are under research and not solely available two IGBTs with diodes connected in parallel with it serves the purpose of bidirectional switch operation.It has maximum input-output transfer ratio limited to 87% for the sinusoidal input and output waveforms.Matrix converter can be employed in electrical substations or regulating the distribution grid voltages , in high power applications to regulate the power flow in transmission grids , to provide electrical connection between power generator and electrical grid in renewable energy applications , in the transport industry ranging from the aero-space sector to the railway sector , in electric traction substation for a power electronic transformer precisely as an input and output converter for high frequency transformer. The requirement of reactive power compensators are not required in the traction substation to for the compensation of losses and for the old locomotives the power factor can be improved with the matrix converters as it provides the controllable input power factor. Single-phase matrix converter is an forced commutated converter. The circuit diagram of a single phase matrix convert is shown below[2].

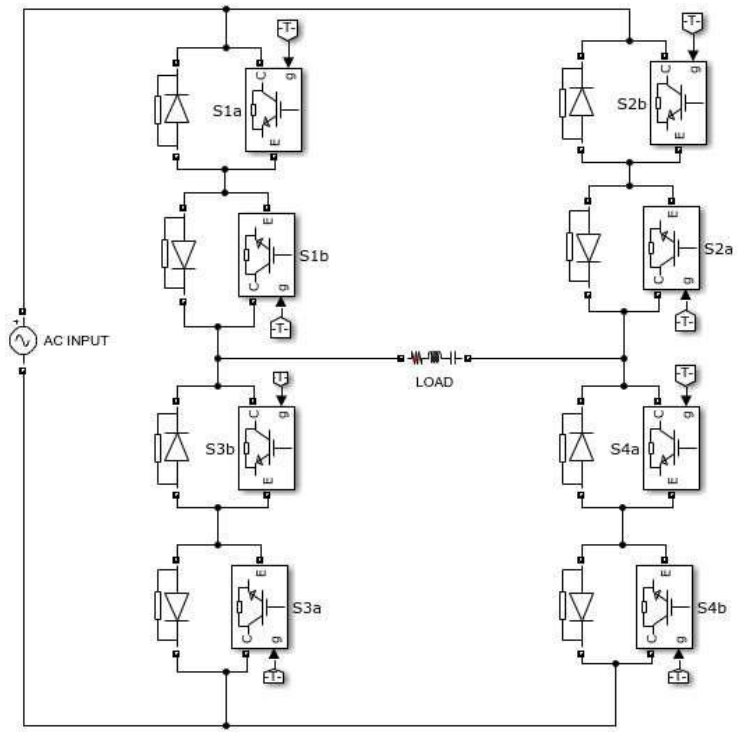

Fig 1:single phase matrix converter

The diode which is connected parallel with the IGBT should possess the reverse blocking capabilities.Inspite of different configurations,common emitter configuration is employed for each switch.Depending on the current flow,respective IGBTs will be turned ON.As shown below, in the matrix of the converter 'S' represents switching state of the switch.whereas '1' represents ON state of the switch and '0' represents OFF state of the switch.

The possible states of the single phase matrix converter as well as three phase matrix converter can be depicted in the form of a matrix and hence the name matrix converter.S in the matrix represents the state of the every switch.in the converter where,'S' will be equals to '1' for 'ON' state and 'S' will be equals to '0' for 'OFF' state.

$$S = \begin{bmatrix} S11 & S12 \\ S21 & S22 \end{bmatrix}$$

Two IGBT's with the anti-parallel diode constitutes an bi-directional switch. When a forward current flow is to flow through the switch then the switches 'S1a' is turned ON and when a current of reverse direction is to flow from the switch then the switch 'S1b' will be turned ON with the forward biased respective diodes. The operation of the switch for forward and reverse current flow directions are depicted in the below figure as a single,switch.

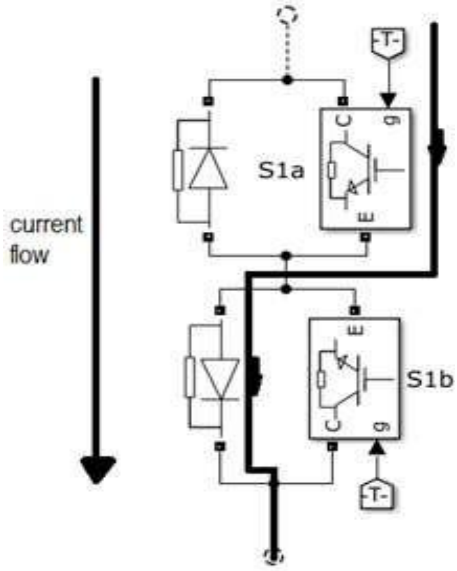

(a)

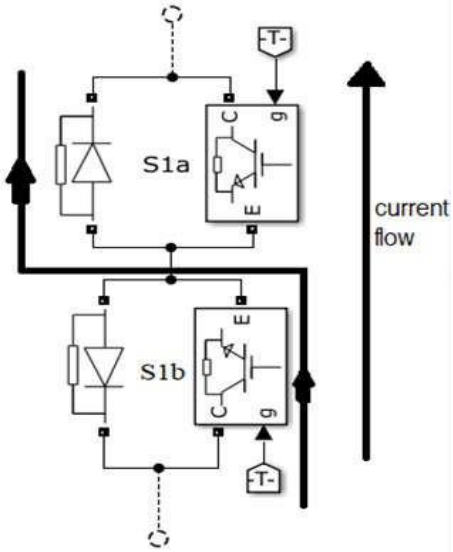

(b)

Fig 2:Bi-directional switch (a)forward current flow (b) reverse current flow

III. PRINCIPLE OF OPERATION

Single phase matrix converter undergoes four possible states for step-up frequency operation.when the input voltage is under positive direction,switch 1a turns ON in switch 1 and switch 4a turns ON in switch 4 which gives the path as Vin-S1a-load-S4a-vin.Under state 2 when the input voltage is in negative direction switch 1b in switch 1 and switch 4b in switch 4 conducts and the path now be Vin-

S4b-load-S1b.Under state 3 when the input voltage is positive and required output voltage is negative, switches 2b and 3b conducts and the path now be Vin-S3b-load-S2b.Under state 4 when the input voltage is negative and required output voltage polarity is negative switches 3a and 2a conducts, path representing it be Vin-S3a-load-S2a-Vin. In the below figure a table consisting of possible switching combinations for the single phase matrix converter is shown.

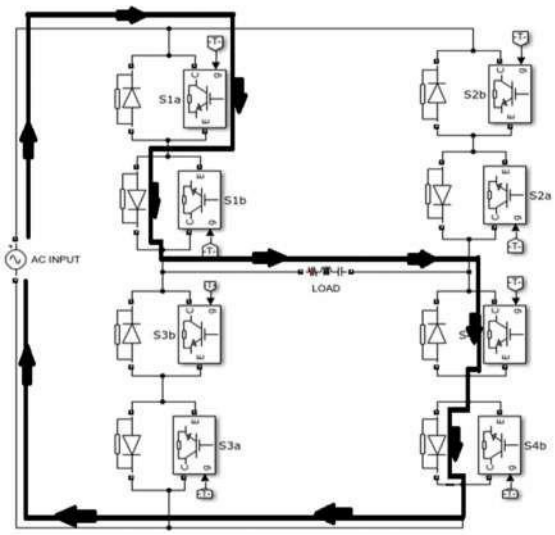

(a) operation under mode 1

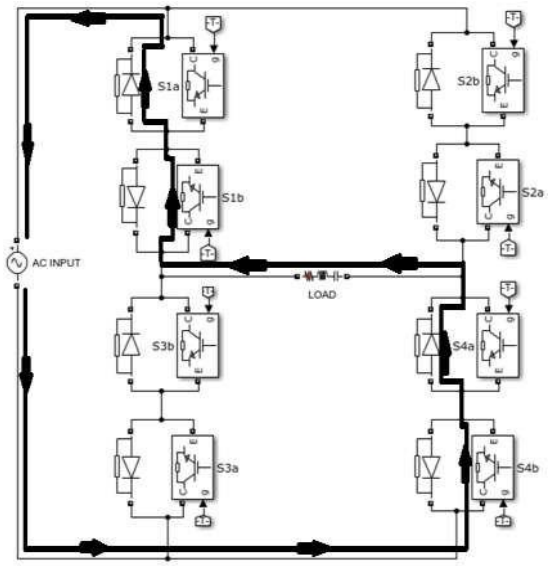

(b) operation under mode 2

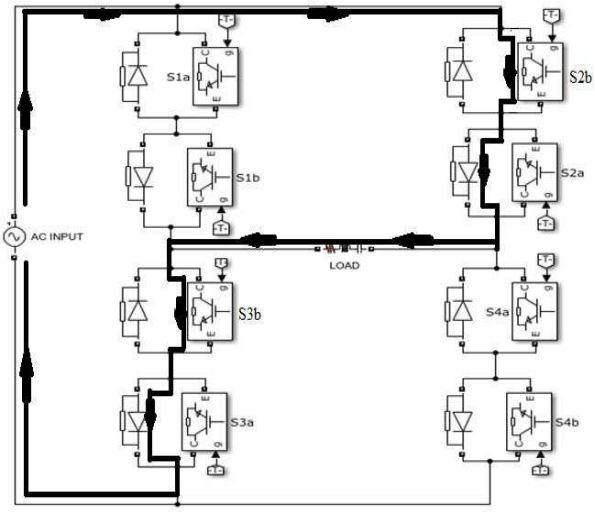

(c) operation under mode 3

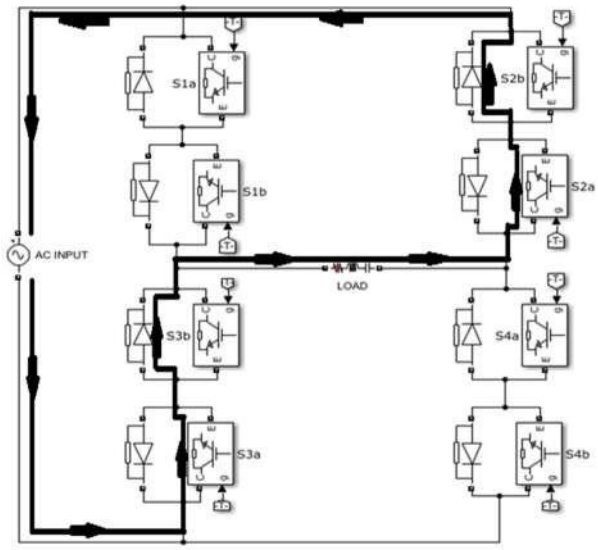

(d) operation under mode 4

Fig 3: Possible states of a single phase matrix converter

The four possible states of the single phase matrix converter have been depicted in the below table. With the possible switching states pulse width modulation technique can be performed appropriately.

TABLE 1-POSSIBLE SWITCHING COMBINATIONS

OF A SINGLE PHASE MATRIX CONVERTER

STATES	S11	S12	S21	S22
1	1	0	0	1
2	1	0	0	1
3	0	1	1	0
4	0	1	1	0

IV. SPWM TECHNIQUE

Sinusoidal pulse width modulation technique is one of the types of pulse width modulation technique.In which a high frequency triangular wave is compared with the sinusoidal signal of desired magnidude and frequency and as a result of the comparision of both the signals ,pulses will be generated which are fed to the converter switches as gate pulses.The magnitude and duration of these pulses generated can be easily controlled. Sinusoidal PWM technique is one of the simplest control technique for control of matrix converter.Whereas in the technique employed ,carrier wave be the triangular waveform and reference wave be the sinusoidal signal. Reduced complexity and good dynamic response are few important advantages of the sinePWM technique[3].The number of pulses generated per cycle is decided by the ratio of triangular carrier frequency to that of modulating sinusoidal frequency. Modulation ratio(Mr) is given by the ratio,

$$Mr = \frac{\text{Frequency of carrier waveform}}{\text{Frequency of modulating waveform}} \quad (1)$$

Modulation index is related to harmonic frequency and harmonics are generally located at:

$$f = kMr(fm)$$

Where fm is the frequency of the modulating signal and k is an integer (1,2,3,.).

Amplitude modulation index is given by the ratio of amplitude of modulating reference waveform to the amplitude of carrier wave and it is given by,

$$M = Ar/Ac$$

Where Ar is the amplitude of the reference waveform and Ac is the amplitude of the carrier waveform.Magnitude modulation index is related to the fundamental output voltage(sine).Higher the MI, higher the output and vice-versa.In the sinusoidal pulse width modulation technique , reference

wave 1 be the sinusoidal signal whose phase shift is zwro degrees frequency of 30khz and reference wave 2 be another sinusoidal signal of phase shift of 180 degrees with a frequency of 30khz.When triangular carrier wave is compared with reference wave 1 , pulses for driver circuit 1 will be generated whereas when the carrier wave is compared with the reference wave 2 , then pulses of driver circuit 2 will be generated which is as shown in the figure (4).

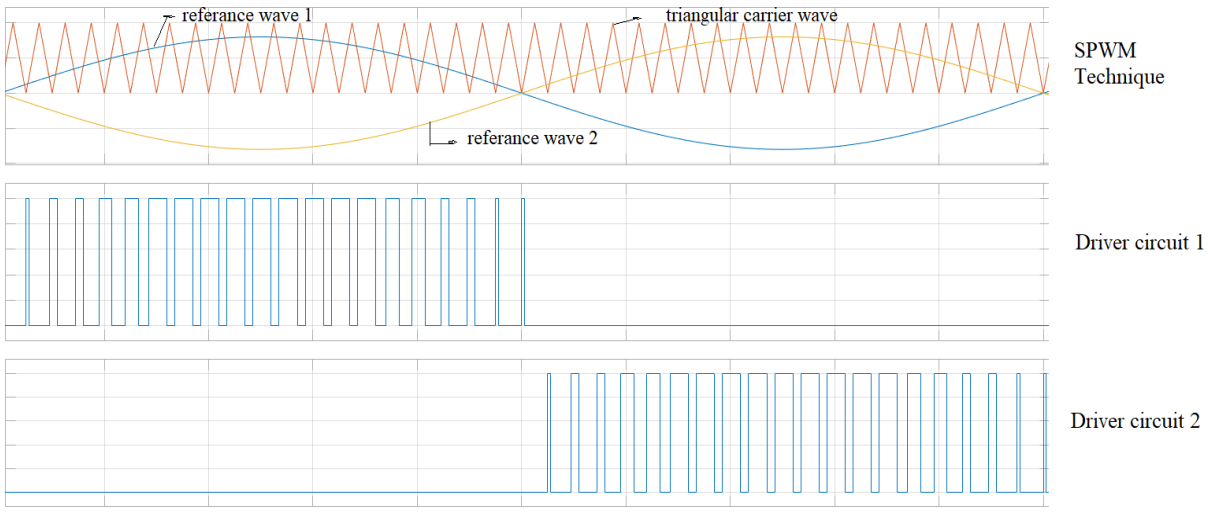

Fig 4:SinePWM technique

V.SIMULINK MODEL OF SPWM TECHNIQUE

The simulink model for the sine PWM technique in order to generate the pulses for the single phase matrix converter has been simulated in the matlab /SIMULINK software as shown in the figure (5) .The pulses generated after the successful implementation of the circuit have been depicted in the figure (7).Compared signals have been multiplied with the pulse generator to produce the respective pulses for the converter switches. The width and amplitude of the pulses generated can be easily varied.

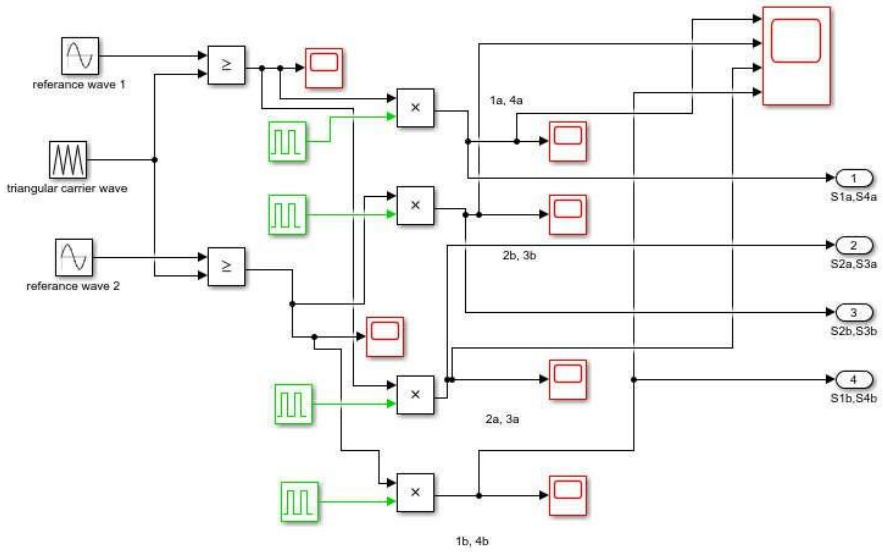

Fig 5:simulink model of SPWM technique

VI. SIMULATED RESULTS

Simulated model of single phase matrix converter which has been implemented in the MATLAB/SIMULINK software is shown in figure (6).

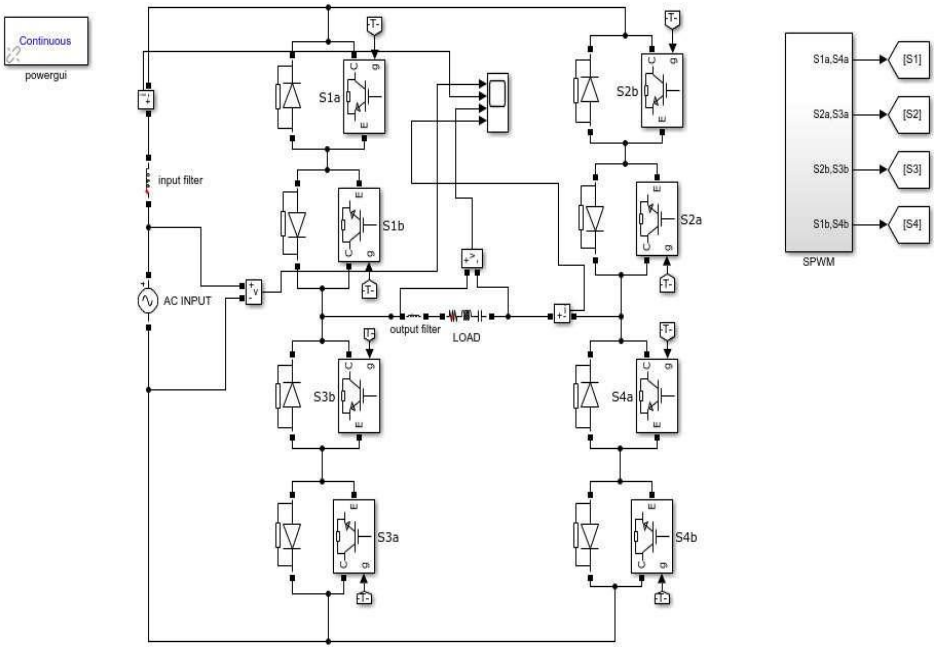

Fig 6:simulink model of the proposed matrix converter

The four pulses which are generated with the sinusoidal pulse width modulation technique is shown in below figure (7).

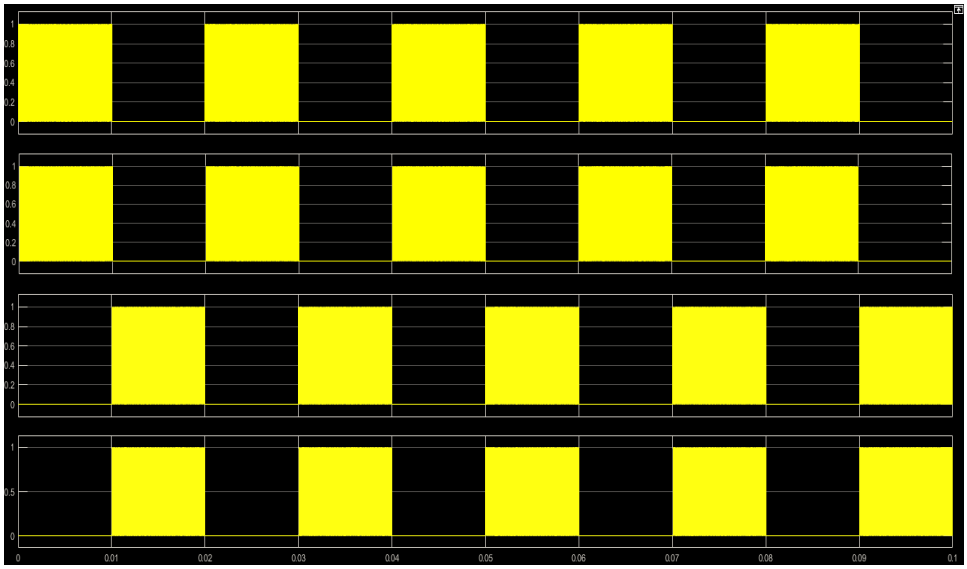

Fig 7:Pulses for single phase matrix converter

TABLE-2-PARAMETERS

PARAMETER	**RANGE**
INPUT VOLTAGE	230V PEAK
INPUT FREQUENCY	50hz
INPUT FILTER	L=10mH
OUTPUT VOLTAGE	230V PEAK
OUTPUT FREQUENCY	30khz
LOAD VALUES	R=10ohms,L=140mH,C=2.01e-7

Voltage and current for both the input and output of the matrix converter is shown below in figure (8).Input volgae and current with its magnitude and phase angle is shown in figure (9).Which depicts the unity power factor at the input.

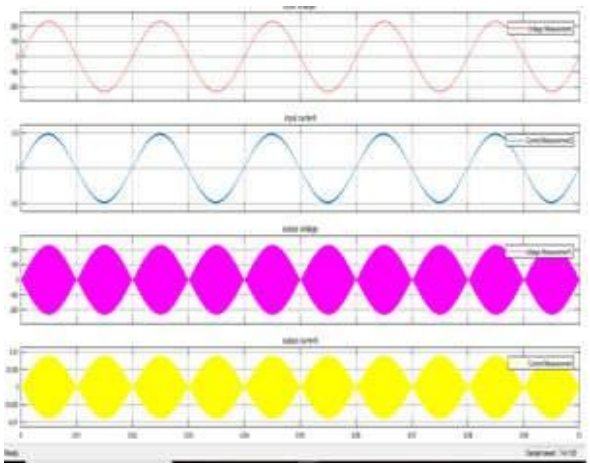

Fig 8:(i)input voltage,(ii)input current,(iii)output voltage,(iv)output current

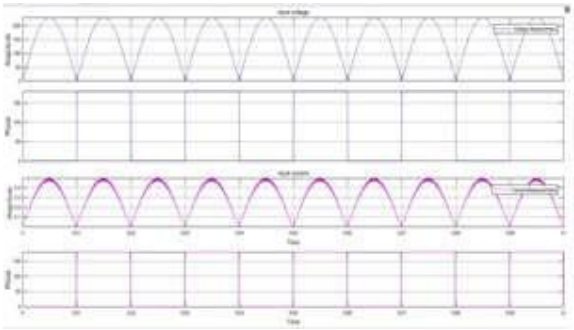

Fig 9:input voltage and current with magnitude and phase angle

Output voltage and current of the single phase matrix converter is shown in below figure (10) and the details of it is shown in figure (10).Obtained 230v 30khz for 230v and 50hz input frequency.

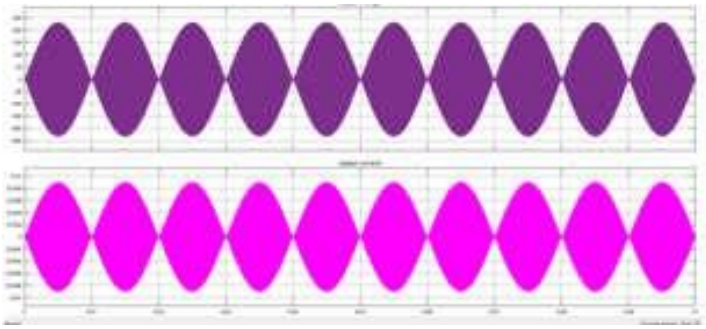

Fig 10:output voltage and current at 30khz frequency

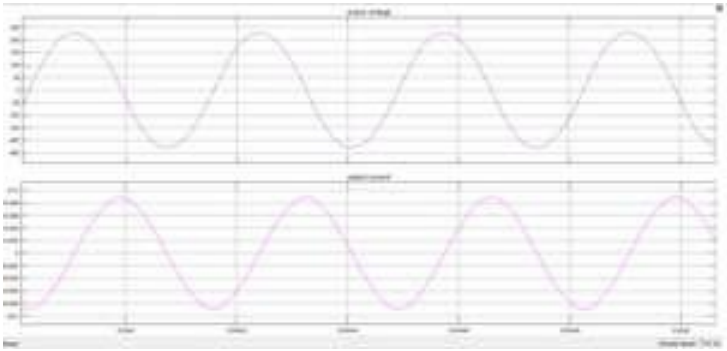

Fig 11:details of otput voltage and current

The THD analysis of input current , output voltage and output current have in the figure (12),(13) and (14) respectively.

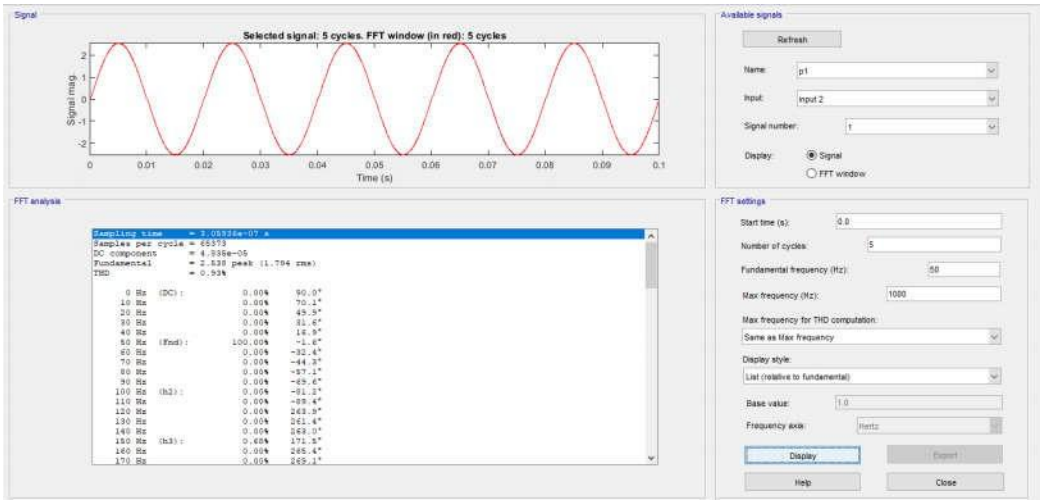

Fig 12:THD of input current

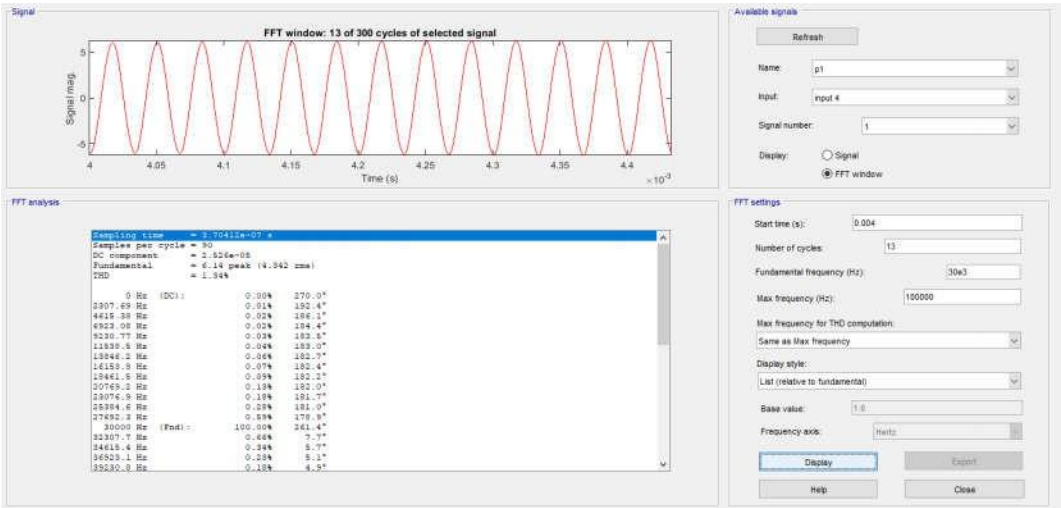

Fig 13:THD of output voltage

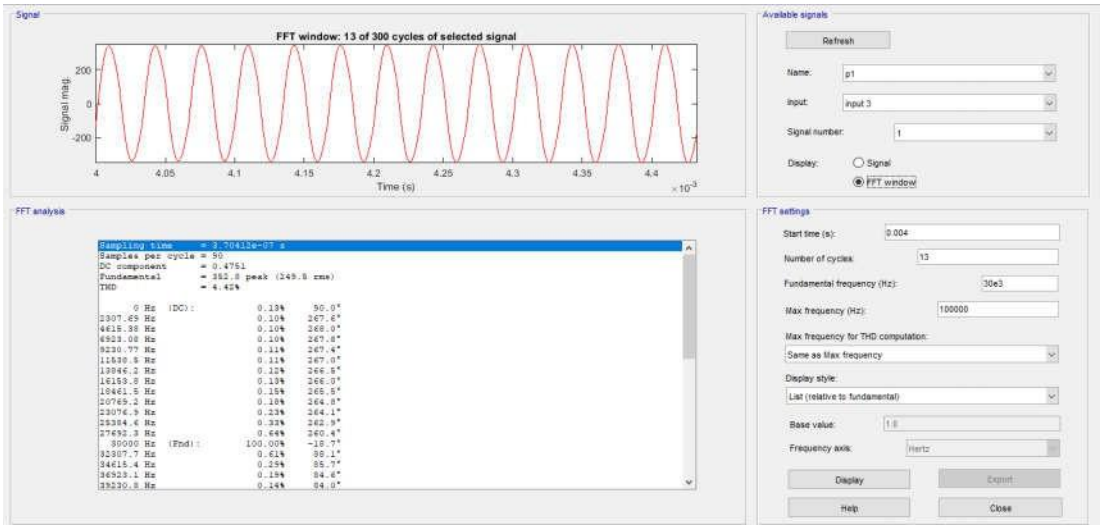

Fig 14:THD of output current

VII. CONCLUSION

A single phase matrix converter with high frequency output voltage and current with required magnitude and frequency has been modelled using matlab/SIMULINK software.It has been verified that the input power factor is unity.With the sine pulse width modulation technique ,operation of single phase matrix converter was successfully verified and the obtained results have been explained.

ACKNOWLEDGMENT

I take this opportunity to extend my profound thanks and deep sense of gratitude to god and my family for giving me the opportunity and strength along with patience to undertake this work. I am also grateful to our professors for the kind encouragement and constant support extended in completion of this work. I am also thankful to all those who have incidentally helped me, through their valuable guidance ,co-operation and unstinted support during the course of my project.

REFERENCES

[1] Zuckerberger A.,Weinstock,D.and Alexanderrovitz A.,''Single phase Matrix Converter'',IEE Proc.Electric Power App.,pp.235-240,july 1997.

[2] S.,Hamzah M.K., "Modelling and simulation of a single-phase AC-AC matrix converter using SPWM", Proc.of student Conference on Research and Development, SCOReD 2002, pp. 286-289, July 2002.

[3] Firdaus, S., Hamzah, M.K.," Modelling and simulation of a single-phase ACAC matrix converter using SPWM," Research and Development, 2002. SCOReD2002. Student Conference on 16-17 July 2002, Page(s):286-289.

[4] Adrial Popovici, Viorel popescu, Micea babita, Dan Lasui, Dan negoitesul, "Modelling, Simulation and Design of Input Filter for Matrix Converter," 2005 international conference on dynamic systems and control,Venice,Italy,November 2-4, 2005,pp.439-444.

[5] Venturini M and Alensina A, " the generalized Transformer: a New Bidirectional Sinusoidal Wave Form Frequency Converter With Continuously Adjustable Input Power Factor.", IEEE Power Electron. Spec. Conf. Rec., 1980,pp. 242-252.

[6] Venturini M, " A New Sine Wave In Sine Wave Out Conversion Technique Eliminates Reactive Elements." Proceeding of Powercon 7,pp.E3/1-E3/15. [5] Holmes D.G, and Lipo T.A, "Implementation of a Controlled Rectifier Using AC-AC Matrix Converter Theory", IEEE Power Electron. Sep. Conf. Rec.,1989,pp.353359.

[7] Zahirrudin Idris, Mustafar Kamal hamzath, "Implementation of a new Single phase Cycloconverter based on Single phase Matrix Converter Topoloy using Sinusoidal Pulse Width Modulation with passive Load Condit", in 2006 first IEEE Conference on Industrial Electronics and Applications.

[8] Mahendran Nagalingam, Dr. G.Guruswamy. "Computer Applications in Power Electronic Systems", in International Journal of Computer Applications, Volume 10, No.7, November 2010.