Simulation of Extended Range Hybrid Type Full Bridge DC-DC Converter with Closed Loop Control

M. Durga Sai Chand
PG Scholar, Department of EEE
GIET (A)
Rajahmundry, Andhra Pradesh, India

B.V.R.S. Bhanu Seshu
Assistant Professor, Department of EEE
GIET (A)
Rajahmundry, Andhra Pradesh, India

Abstract— ***This paper presents a hybrid-type Z-Source full-bridge dc/dc converter with high efficiency. Using a hybrid control scheme with a simple circuit structure, the proposed dc/dc converter has a Z- Source impedance which will extend the range of the full bridge converter. Under a normal input range, the proposed converter operates as a phase-shift full-bridge series-resonant converter that provides high efficiency by applying soft switching on all switches and rectifier diodes and reducing conduction losses. When the input is lower than the normal input range, the converter operates as an active-clamp step-up converter that enhances an operation range. Due to the hybrid operation, the proposed converter operates with larger phase-shift value than the conventional converters under the normal input range. Thus, the proposed converter is capable of being designed to give high power conversion efficiency and its operation range is extended. A 1-kW prototype is implemented to confirm the theoretical analysis and validity of the proposed converter.***

Keywords— Active-clamp circuit, full-bridge circuit, phaseshift control.

I. Introduction

A dc-to-dc converter is an electromechanical device or electronic circuit which converts a source of direct current from one voltage level to another. It is a type of electric power converter. Power levels range from very (small batteries) to very high (high-voltage power transmission).Nowadays, demands on dc/dc converters with a high power density, high efficiency, and low electromagnetic interference (EMI) have been increased in various industrial fields. As the switching frequency increases to obtain high power density, switching losses related to the turn-on and turn-off of the switching devices increase. Because these losses limit the increase of the switching frequency, soft switching techniques are indispensable.

Dc to dc converters are used in portable electronic devices such as cellular phones and laptop computers, which are supplied with power from batteries primarily. Such electronic devices often contain several sub-circuits, each with its own voltage level requirement different from that supplied by the battery or external supply (sometimes higher or lower than the supply voltage).Additionally, the battery voltage declines as its stored energy is drained. Switched dc to dc converters offer a method to increase voltage from a partially lowered battery voltage thereby saving space instead of using multiple batteries to accomplish the same thing.

Most dc to dc converter circuits also regulate the output voltage. Some exceptions include high-efficiency LED power sources, which are a kind of dc to dc converter that regulates the current through LEDs, and the simple charge pumps which double or triple the output voltage.

Dc to Dc converters developed to maximize the energy harvest for photovoltaic systems and for wind turbines are called power optimizers.Transformers used for voltage conversion at mains frequencies of 50-60 Hz must be large and heavy for powers exceeding a few watts. This makes them expensive, and they are subject to energy losses in their windings and due to eddy currents in their cores. Dc-to-Dc techniques that use transformers or inductors work at much high frequencies, requiring only much smaller, lighter, and cheaper wound components. Consequently these techniques are used even where a mains transformer could be used; for example, for domestic electronic appliances it is preferable to rectify mains voltage to DC, use switch-mode techniques to convert it to high-frequency AC at desired voltage, then, usually, rectify to DC.The entire complex circuit is cheaper and more efficient than a simple mains transformer circuit of the same output.

Linear regulators which are used to output a stable DC independent of input voltage and output load from a higher but less stable input by dissipating excess volt-amperes as heat could be described literally as DC-to-DC converters, but this is not usual usage. (The same could be said of a simple voltage dropper resistor, whether or not stabilized by a following voltage regulator or Zener diode.)

There are also simple capacitive voltage doubler and Dickson multiplier circuits using diodes and capacitors to multiply a DC voltage by an integer value, typically delivering only a small current. Practical electronic converters use switching techniques. Switched-mode DC-to-DC converters convert one DC voltage level to another, which may be higher or lower, by storing the input energy temporarily and then releasing that energy to the output at a different voltage. The

storage may be in either magnetic field storage components (inductors, transformers) or electric field storage components (capacitors). This conversion method can increase or decrease voltage. Switching conversion is more power efficient (often 75% to 98%) than linear voltage regulation, which dissipates unwanted power as heat. Fast semiconductor device rise and fall times are required for efficiency; however, these fast transitions combine with layout parasitic effects to make circuit design challenging. The higher efficiency of a switched-mode converter reduces the heat sinking needed, and increases battery endurance of portable equipment. Efficiency has improved since the late 1980s due to the use of power FETs, which are able to switch more efficiently with lower switching losses at higher frequencies than power bipolar transistors, and use less complex drive circuitry. Another important improvement in DC-DC converters is replacing the flywheel diode by synchronous rectification using a power FET, whose "on resistance" is much lower, reducing switching losses. Before the wide availability of power semiconductors, low-power DC-to-DC synchronous converters consisted of an electro-mechanical vibrator followed by a voltage step-up transformer feeding a vacuum tube or semiconductor rectifier, or synchronous rectifier contacts on the vibrator.

Most DC-to-DC converters are designed to move power in only one direction, from dedicated input to output. However, all switching regulator topologies can be made bidirectional and able to move power in either direction by replacing all diodes with independently controlled active rectification. A bidirectional converter is useful, for example, in applications requiring regenerative braking of vehicles, where power is supplied to the wheels while driving, but supplied by the wheels when braking.

Switching converters are electronically complex, although this is embodied in integrated circuits, with few components needed. They need careful design of the circuit and physical layout to reduce switching noise (EMI / RFI) to acceptable levels and, like all high-frequency circuits, for stable operation. Cost was higher than linear regulators in voltage-dropping applications, but this dropped with advances in chip design than DC-to-DC converters are available as integrated circuits (ICs) requiring few additional components. Converters are also available as complete hybrid circuit modules, ready for use within an electronic assembly.

Hard switched - transistors switch quickly while exposed to both full voltage and full current resonant - an LC circuit shapes the voltage across the transistor and current through it so that the transistor switches when either the voltage or the current is zero.

Magnetic DC-to-DC converters may be operated in two modes, according to the current in its main magnetic component (inductor or transformer):

1. **Continuous** - the current fluctuates but never goes down to zero
2. **Discontinuous** - the current fluctuates during the cycle, going down to zero at or before the end of each cycle. A converter may be designed to operate in continuous mode at high power, and in discontinuous mode at low power.

The half bridge and flyback topologies are similar in that energy stored in the magnetic core needs to be dissipated so that the core does not saturate. Power transmission in a flyback circuit is limited by the amount of energy that can be stored in the core, while forward circuits are usually limited by the I/V characteristics of the switches.

Although MOSFET switches can tolerate simultaneous full current and voltage (although thermal stress and electromigration can shorten the MTBF), bipolar switches generally can't so require the use of a snubber (or two).High-current systems often use multiphase converters, also called interleaved converters Multiphase regulators can have better ripple and better response times than single-phase regulators. Many laptop and desktop motherboards include interleaved buck regulators, sometimes as a voltage regulator module.

II. Z-Source Converter

2.1 Introduction

The Z-source converter (ZSC) is a new topology in power conversion, which has unique features that can overcome the limitations of VSI and CSI [5]. Figure 2.1 shows the ZSC implemented as a 3-phase DC/AC converter (inverter). Although DC/AC conversion is the most common application of the Z-source topology, it can also be applied to AC/DC and AC/AC power conversions [24-25]. The X shape impedance is the Z-source network which is composed of two split inductors and two capacitors to provide a coupling between the DC source and the inverter bridge.

The Z-source inverter (ZSI) has the unique buck-boost capability which ideally gives an output voltage range from zero to infinity regardless of the input voltage. This is achieved by using a switching state that is not permitted in the VSI which is called the ―shoot-through‖ state. This is the state when both upper and lower switches of a phase leg are turned on. In a conventional VSI switching pattern, there are eight permissible switching states. Six of those switching states are called the ―active‖ states where the load sees the input voltage and the remaining two states are called the ―zero‖ states where either all the upper or all the lower switches are on and the load sees zero voltage.

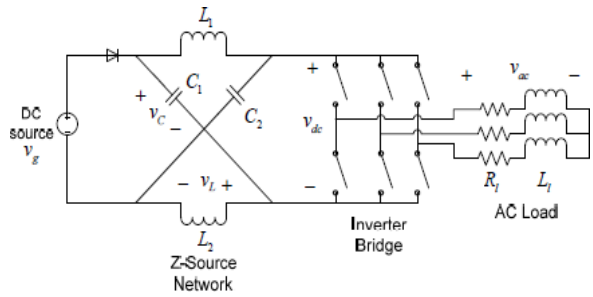

Figure 2.1 ZSC implemented as a three-phase inverter (ZSI)

Figure 2.2(a) shows the carrier based PWM switching pattern for a VSI. According to this switching method, the reference signals for the three phase voltages are compared to a triangular carrier signal. If a reference signal is greater than the carrier signal, the upper switch in the leg of the corresponding phase becomes on and the lower switch of the same phase leg becomes off and vice versa. All of the 8 permissible switching states of a VSI can be distinguished from Figure 2.2(a) including the two zero states. First zero state occurs when the carrier wave is greater than all of the reference signals, i.e. all the upper leg switches are on and the

lower leg switches are off. The second zero state occurs when the carrier wave is smaller than all of the reference signals.

The shoot-through state can be distributed among the carrier based switching pattern of the VSI in Figure 2.2(a) without distorting the carrier based PWM signal generation. Figure 2.2(b) illustrates the addition of the shoot-through state as equally distributed amounts of time inside the zero states. It can be seen from Figure 2.2(b) that the active states for both carrier based PWMs are the same for the VSI and the ZSI. This guarantees that the modulation index (M) which is defined as the ratio of the total active states to the whole period, is the same for both switching patterns.

Another advantage of the ZSI compared to the VSI appears in the practical implementation of the carrier based PWM switching pattern. For protection purposes it is necessary to put ―dead times‖ during the transitions from one switching state to the other. This causes output waveform distortion. Due to the unique impedance network that ZSI uses, the dead times are not necessary.

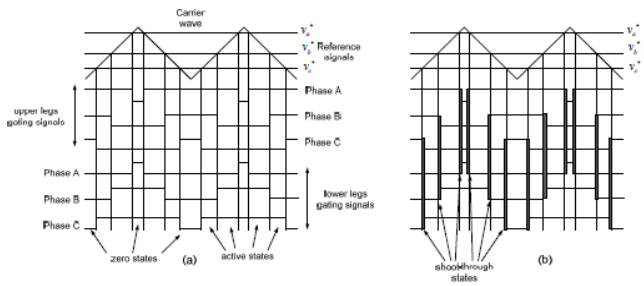

Figure 2.2 (a) Carrier based PWM for VSI (b) Modified carrier based PWM for ZSI

2.2 Steady State Operation

In order to do the steady state analysis and find the conversion ratio of the ZSC, we will reduce the circuit in Figure 2.1 to Figure 2.3. The idea behind this is that when we look from the Z-source network point of view, in the shoot-through state of Figure 2.2, the Z-source network is shorted and in the active state, the Z-source network sees the load. This behavior can be simplified using the circuit given in Figure 2.3. In this circuit, when the parallel switch 2 *S* is on, the Z-source impedance network is shorted and the load sees zero voltage. Similarly, when 2 *S* is off, the Z-source network sees the load and active state occurs as in Figure 2.2(a). It can be observed that the dc-link voltage (*dc v*) in Figure 2.3 has a pulsating nature. For simplification purposes, Z-source network parameters are selected as; *L*1 □ □*L*2 and 1 2 *C* □ □*C* which makes the Z-source network symmetrical [8]. Accordingly, the capacitor and inductor voltages of the Z-source network become,

$$v_{C1} = v_{C2} = v_C \text{ and } v_{L1} = v_{L2} = v_L$$

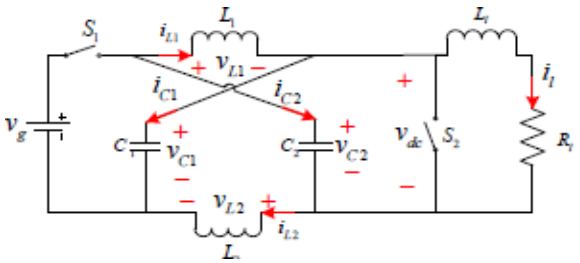

Figure 2.3 Simplified ZSC

In Figure 2.3, *C v* is the capacitor voltage and *L v* is the inductor voltage. Given that the converter is in the shoot-through state for an interval of *o T* during a switching cycle *T* , from the equivalent circuit in Figure 2.4 we have,

$$v_L = v_C$$
$$v_{dc} = 0$$

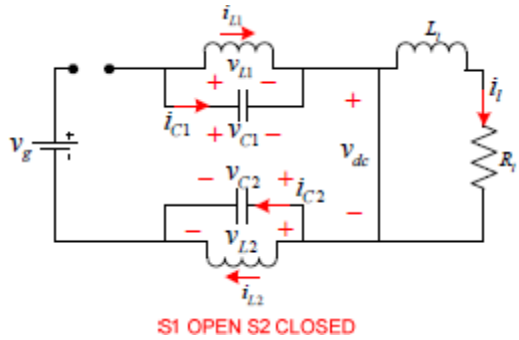

Figure 2.4 Shoot-through state of simplified ZSC

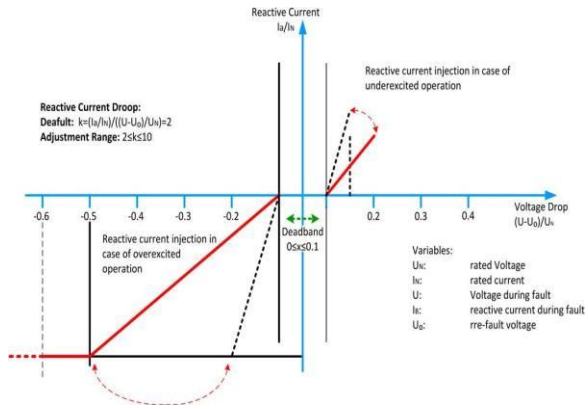

Figure 2.1 REE voltage support requirement in the event of grid fault

III. Hybrid Type Full Bridge DC/DC Converter

Now a days, demands on dc/dc converters with a high power density, high efficiency, and low electromagnetic interference (EMI) have been increased in various industrial fields. As the switching frequency increases to obtain high power density, switching losses related to the turn-on and turn-off of the switching devices increase. Because these losses limit the increase of the switching frequency, soft switching techniques are indispensable.

Among previous dc/dc converters, a phase-shift full-bridge (PSFB) converter is attractive because all primary switches are turned on with zero-voltage switching (ZVS) without additional auxiliary circuits. However, the PSFB converter has some serious problems such as narrow ZVS range of lagging-leg switches, high power losses by circulating current, and voltage ringing across rectifier diodes. Especially, with a requirement of wide input range, the PSFB converter is designed to operate with small phase-shift value under the normal input range; the design of the PSFB converter lengthens the freewheeling interval and causes the excessive circulating current which increases conduction losses

Recently, the various PSFB converters using auxiliary circuits have been introduced. The PSFB converters extend ZVS range or reduce the circulating current by utilizing additional passive or active auxiliary circuits. However, the additional circuits result in complicated circuit configuration, complex control strategy, and extra power losses. In addition, some PSFB converters still require the extra snubber to prevent serious voltage ringing problem across rectifier diodes. In the PSFB converters employing a series-resonant converter have been introduced, namely, the PSFB series-resonant converters; they have many advantages such as soft switching techniques of all primary switches and rectifier diodes, elimination of circulating current, reduction of voltage stress on rectifier diodes, and a simple circuit structure. However, when all aforementioned PSFB converters are required to guarantee a wide operation range, they still operate with the small phase shift value under the normal input range. The operation with the small phase-shift value generally gives high conduction losses by high peak current; it results in low power efficiency. To achieve high efficiency under the normal input range and cover the wide input range, the different techniques are suggested. The converters in change the turn ratio of the transformer by using additional switching devices. Although the approach achieves high efficiency and ensures the wide input range, these techniques give circuit complexity and reduction of the transformer utilization.

Active-clamp circuits have been commonly used to absorb surge energy stored in leakage inductance of a transformer. Moreover, the circuits provide a soft switching technique. Some studies have introduced dc/dc converters combining the active-clamp circuit and voltage doubler or multiplier rectifier. The circuit configuration allows to achieve a step-up function like a boost converter. The voltage stresses of rectifier diodes are also clamped at the output voltage and no extra snubber circuit is required.

Figure 1 shows a simplified circuit of a phase shifted full bridge. MOSFET switches QA, QB, QC and QD form the full-bridge on the primary side of the transformer T1. QA and QB are switched at 50 % duty and 180 degree out of phase with each other. Similarly, QC and QD are switched at 50 % duty and 180 degree out of phase with each other. The PWM switching signals for leg QC – QD of the full bridge are phase shifted with respect to those for leg QA - QB. Amount of this phase shift decides the amount of overlap between diagonal switches, which in turn decides the amount of energy transferred. D1, D2 provide diode current doubler rectification on the secondary, while Lo and Co form the output filter. Inductor LR provides assistance to the transformer leakage inductance for resonance operation with MOSFET capacitance and facilitates Zero Voltage Switching (ZVS). Note the two different grounds G1 and G2 on the two sides of transformer T1. Figure 2 provides the switching waveforms for the system in Figure 1.

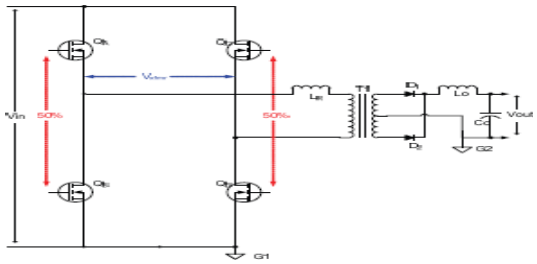

Fig.3 phase shift full bridge circuit

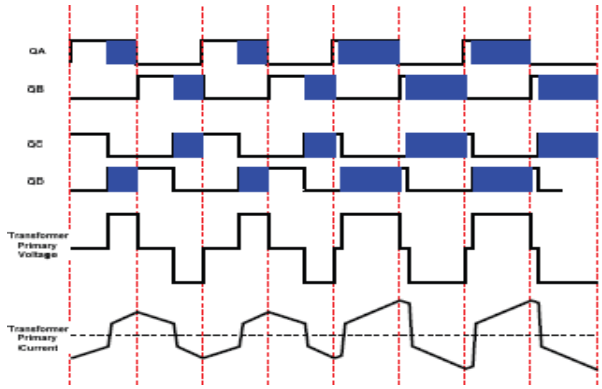

Fig.3.1 phase shift full bridge pwm waveforms

IV. Simulation Results

With the analysis and design guidelines presented in the previous chapters, the proposed converter is designed in MATLAB Simulink for hybrid type full bridge dc-dc circuit with high efficiency. The circuit diagram shown in below

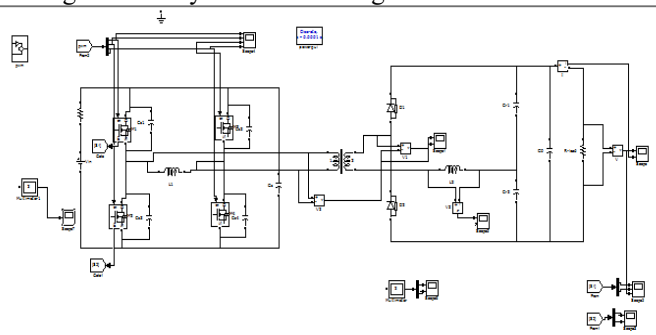

Fig 4.5: Hybrid type dc-dc converter with high efficiency designed in mat lab

And we get the waveforms output voltage vs input voltage as shown in below figure

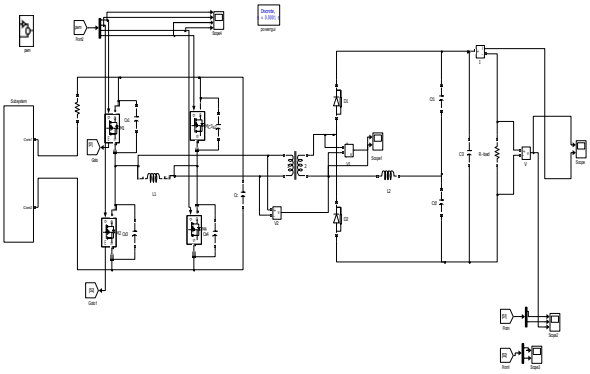

Fig: Simulation circuit of Proposed Z-Source fed full bridge DC-DC Converter

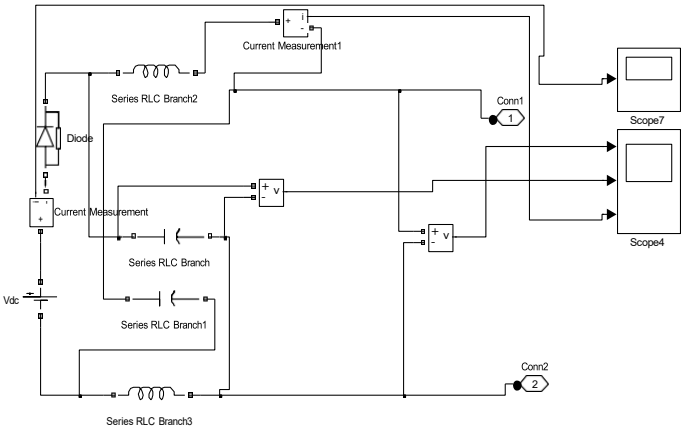

Fig: Simulation circuit of Z-Souce

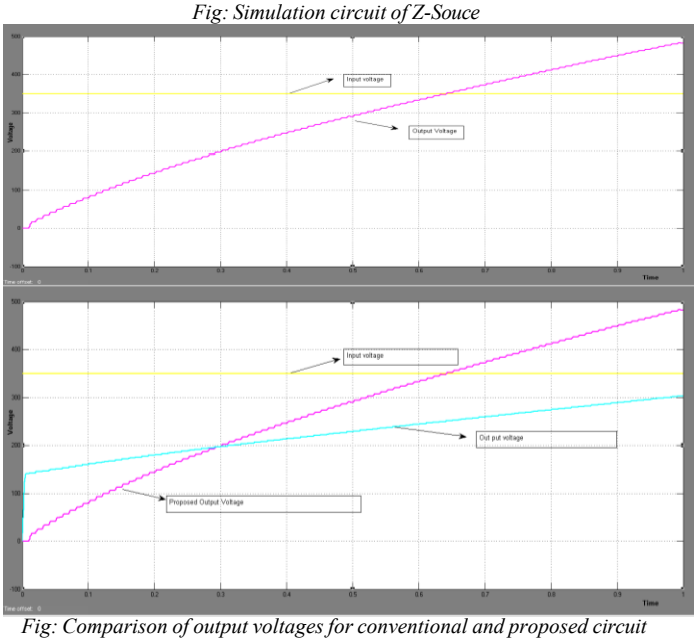

Fig: Comparison of output voltages for conventional and proposed circuit

The above figure shows the extended range of DC-DC converter. For conventional circuit the output voltage is nearly 300 volts for an input of 350 volts. But in proposed Z-source full bridge DC-DC converter the out put voltage is nearly 450 volts for same input DC voltage. From this figure we can say that the proposed circuit will work as a extended range of DC-DC converter with good efficiency

V. Conclusion

The novel hybrid-type full-bridge dc/dc converter with high efficiency has been introduced and verified by the analysis and experimental results. By using the hybrid control scheme with the simple circuit structure, the proposed converter has both the step-down and step-up functions, which ensure to cover the wide input range. Under the normal input range, the proposed converter achieves high efficiency by providing soft switching technique to all the switches and rectifier diodes, and reducing the current stress. When the input is lower than the normal input range, the proposed converter provides the step-up function by using the active-clamp circuit and voltage doubler, which extends the operation range.

References

[1] J. A. Sabat´e, V. Vlatkovic, R. B. Ridley, F. C. Lee, and B. H. Cho, —Design considerations for high-voltage high-power full-bridge zero-voltageswitching PWM converter,‖ in *Proc. Appl. Power Electron. Conf.*, 1990,pp. 275–284.

[2] I. O. Lee and G. W. Moon, —Phase-shifted PWM converter with a wide ZVS range and reduced circulating current,‖ *IEEE Trans. Power Electron.*, vol. 28, no. 2, pp. 908–919, Feb. 2013.

[3] Y. S. Shin, S. S. Hong, D. J. Kim, D. S. Oh, and S. K. Han, —A new changeable full bridge dc/dc converter for wide input voltage range,‖ in *Proc. 8th Int. Conf. Power Electron. ECCE Asia*, May 2011, pp. 2328–2335.

[4] P. K. Jain, W., Kang, H. Soin, and Y. Xi, —Analysis and design considerations of a load and line independent zero voltage switching full bridge dc/dc converter topology,‖ *IEEE Trans. Power Electron.*, vol. 17, no. 5, pp. 649–657, Sep. 2002.

[5] I. O. Lee and G. W. Moon, —Soft-switching DC/DC converter with a full ZVS range and reduced output filter for high-voltage application,‖ *IEEE Trans. Power Electron.*, vol. 28, no. 1, pp. 112–122, Jan. 2013.

[6] G. N. B. Yadav and N. L. Narasamma, —An active soft switched phaseshifted full-bridge dc-dc converter:Analysis, modeling, design, and implementation,‖ *IEEE Trans. Power Electron.*, vol. 29, no. 9, pp. 4538–4550, Sep. 2014.

[7] Y. Jang, M. M. Jovanovi´c, and Y.-M. Chang, —A new ZVS-PWM full-bridge converter,‖ *IEEE Trans. Power Electron.*, vol. 18, no. 5, pp. 1122–1129, Sep. 2003.

[8] T. T. Song and N. Huang, —A novel zero-voltage and zero-currentswitching full-bridge PWM converter,‖ *IEEE Trans. Power Electron.*, vol. 20, no. 2, pp. 286–291, Mar. 2005.

[9] R. Huang and S. K. Mazumder, —A soft-switching scheme for an isolated dc/dc converter with pulsating dc output for a three-phase high-frequency link PWM converter,‖ *IEEE Trans. Power Electron.*, vol. 24, no. 10, pp. 2276–2288, Oct. 2009.

[10] K.W. Seok and B. H. Kwon, —An improved zero-voltage and zero-currentswitching full-bridge PWM converter using a simple resonant circuit,‖ *IEEE Trans. Ind. Electron.*, vol. 48 no. 6, pp. 1205–1209, Dec. 2001.

[11] M. Pahlevaninezhad, P. Das, J. Drobnik, P. K. Jain, and A. Bakhshai, —A novel ZVZCS full-bridge dc/dc converter used for electric vehicles,‖ *IEEE Trans. Power Electron.*, vol. 27, no. 6, pp. 2752–2769, Jun. 2012.

[12] J. Drobnik, M. Bodor, and M. Pastor, —Soft-switching full-bridge PWM dc–dc converter with controlled output rectifier and secondary energy recovery turn-off snubber,‖ *IEEE Trans. Power Electron.*, vol. 29, no. 8, pp. 4116–4125, Aug. 2014.

[13] B., Gu, J.-S. Lai, N. Kees, and C. Zheng, —Hybrid-switching full-bridge dc–dc converter with minimal voltage stress of bridge rectifier, reduced circulating losses, and filter requirement for electric vehicle battery chargers,‖ *IEEE Trans. Power Electron.*, vol. 28, no. 3, pp. 1132–1144, Mar. 2013.

[14] W. J. Lee, C. E. Kim, G. W. Moon, and S. K. Han, —A new phase-shifted full-bridge converter with voltage-doubler-type rectifier for

highefficiency PDP sustaining power module,‖ *IEEE Trans. Ind. Electron.*, vol. 55, no. 6, pp. 2450–2458, Jun. 2008.

[15] E. H. Kim and B. H.Kwon, —Zero-voltage-and zero-current-switching fullbridge converter with secondary resonance,‖ *IEEE Trans. Ind. Electron.*,vol. 57 no. 3, pp. 1017–1025, Mar. 2010.

[16] B. Yang, P. Xu, and F. C. Lee, —Range winding for wide input range front end dc/dc converter,‖ in Proc. IEEE Appl. Power Electron. Conf., 2001, pp. 476–479.

[17] X.Wang, F. Tian, and I. Batarseh, —High efficiency parallel post regulator for wide range input dc–dc converter,‖ *IEEE Trans. Power Electron.*, vol. 23, no. 2, pp. 852–858, Mar. 2008.

[18] R. Watson, F. C. Lee, and G. C. Hua, —Utilization of an active-clamp circuit to achieve soft switching in flyback converters,‖ *IEEE Trans. Power Electron.*, vol. 11, no. 1, pp. 162–169, Jan. 1996.

[19] Q. Li, F. C. Lee, S. Buso, and M. M. Jovanovic, —Large-signal transient analysis of forward converter with active-clamp reset,‖ *IEEE Trans. Power Electron.*, vol. 17, no. 1, pp. 15–24, Jan. 2002.

[20] W. Y. Choi, —High-efficiency DC–DC converter with fast dynamic response for low voltage photovoltaic sources,‖ *IEEE Trans. Power Electron.*, vol. 28, no. 2, pp. 706–716, Feb. 2013.

[21] G. Spiazzi, P. Mattavelli, and A. Costabeber, —High step-up ratio flyback converter with active clamp and voltage multiplier,‖ *IEEE Trans. Power Electron.*, vol. 26, no. 11, pp. 3205–3214, Nov. 2011.

[22] P. Imbertson and N. Mohan, —Asymmetrical duty cycle permits zero switching loss in PWM circuits with no conduction loss penalty,‖ *IEEE Trans. Ind. Appl.*, vol. 29, no. 1, pp. 121–125, Jan. 1993.