# A Novel Level Shifted Modulation Technique for Seven Level Multilevel Inverter

K. Sai Santosh Kumar
PG Scholar, Department of EEE
GIET (A)
Rajahmundry, Andhra Pradesh, India

P. Suguna Ratnamala
Assistant Professor, Department of EEE
GIET (A)
Rajahmundry, Andhra Pradesh, India

***Abstract*— In phased-shifted modulation, a multilevel inverter with m voltage levels requires (m – 1) triangular carriers. In the phase-shifted multicarrier modulation, all the triangular carriers have the same frequency and the same peak-to-peak amplitude, but there is a phase shift between any two adjacent carrier waves, given by Θcr = 360°/(m – 1). In the case of a 7-level CHB (m = 7), as we used in our project, all carrier waves (7-1 = 6) are 60o apart from the neighboring carrier waves. Similar to the phase-shifted modulation, an m-level CHB inverter using level shifted multicarrier modulation scheme requires (m – 1) triangular carriers, all having the same frequency and amplitude. The (m – 1) triangular carriers are vertically displaced such that the bands they occupy are contiguous. The frequency modulation index is given by mf = fcr/fm. In the case of a 7-level CHB (m = 7), as we used in our project, all carrier waves (7-1 = 6) are displaced from the neighbouring carrier waves.**

***Keywords*— *Active Power Filter, Harmonic, Instantaneous P Q Theory, Balanced, Unbalanced Loads, DC Link Voltage Controller, Voltage Source Inverter(VSC)***

## I. Introduction

Multilevel converters used for medium voltage and high voltage applications significantly reduce the harmonic content of the output voltage as compared to the traditional two-level converters [1]–[4]. Multilevel converter schemes for dc-dc conversion are becoming popular [5] in renewable energy applications following the success of this approach in dc-ac conversion. There are many different types of multilevel converters developed [6], which can be directly or indirectly used as step-up dc-dc converters. Modular multilevel converter (MMC) is found to have more attractive features than the others. Diode clamped converters have a large number of diodes required, which will make the system impractical to implement. Conventional flying capacitor converters [7] require many capacitors connected in series. The total series capacitance is much smaller than that of a single one. Therefore, the total volume of capacitors required is quite high. Generalized multilevel converters can be used for step-up dc-dc conversion [8], [9], but the topology results in a large size when the step ratio is high. Other topologies such as input-paralleloutput-series (IPOS) converters [10] and switched capacitor converters have been proposed and developed for step-up dc-dc conversion [11]–[13]. The IPOS converters use resonant sub-modules to achieve high power conversion and efficiency [14], but the main disadvantage is the requirement of a large number of isolation transformers, which have high potential differences between the windings. Switched capacitor converters with series-parallel topologies are subject to incremental voltage stress either on the module switch or on the module capacitor. The highest voltage stress is close to the output (high-side) dc voltage. The switched capacitor converters are also subject to high charge losses and overshoot currents. This problem can be mitigated by driving MOSFETs with very high switching frequency. Therefore, switched capacitor converters are only used under low voltage condition. A power electronics based Cockcroft-Walton multiplier has been demonstrated in [15]. This is a light and cheap solution for high voltage dc experiments when only unidirectional step-up conversion is required. A bidirectional medium voltage ―ladder‖ shaped dc-dc converter is proposed in [16] which can achieve high step ratio. The advantage is that the converter does not require synchronization of switching between sub-modules. However, the current ratings in different sub-modules are not the same and the inductor currents close to the low voltage side are high.

In medium and high voltage applications, modular multi-level converters used for dc-dc conversion are emerging technologies [5], [17]. These converters are based on conventional MMCs [18]–[20]. MMCs usually require a complicated balancing control scheme to maintain the voltage levels. However, they provide more than two levels and good waveform quality. Cells with fault can also be bypassed while keeping the system operational. High modularity and redundancy are the main advantages of MMCs.

## II. Multilevel Inverter

### *A. Importance of multilevel inverter*

A power inverter, or inverter, is an electronic device or circuitry that changes direct current (DC) to alternating current (AC). The input voltage, output voltage and frequency, and overall power handling depend on the design of the specific device or circuitry.

The importance of multilevel inverters has been increased since last few decades. These new types of inverters are

suitable for high voltage and high power application due to their ability to synthesize waveforms with better harmonic spectrum and with less Total Harmonic Distortion (THD). Numerous topologies have been introduced and widely studied for utility of non-conventional sources and also for drive

*B. Main feature of Multi-Level Inverter (MLI)*

1. Ability to reduce the voltage stress on each power device due to the utilization of multiple levels on the DC bus.
2. Important when a high DC side voltage is imposed by an application (e.g. traction systems).
3. Even at low switching frequencies, smaller distortion in the multilevel inverter AC side waveform can be achieved (with stepped modulation technique).

*C. Advantages of Multi-Level Inverter (MLI)*

A multilevel converter has several advantages over a conventional two-level converter that uses high switching frequency pulse width modulation (PWM). The attractive features of a multilevel converter can be briefly summarized as follows.

1. Staircase waveform quality: Multilevel converters not only can generate the output voltages with very low distortion, but also can reduce the dv/dt stresses; therefore Electro Magnetic Compatibility (EMC) problems can be reduced.
2. Common-Mode (CM) voltage: Multilevel converters produce smaller CM voltage; therefore, the stress in the bearings of a motor connected to a multilevel motor drive
3. Input current: Multilevel converters can draw input current with low distortion.
4. Switching frequency: Multilevel converters can operate at both fundamental switching frequency and high switching frequency PWM. It should be noted that lower switching frequency usually means lower switching loss and higher efficiency.

Unfortunately, the multilevel converters do have some disadvantages. One particular disadvantage is the greater number of power semiconductor switches needed. Although lower voltage rated switches can be utilized in a multilevel converter, each switch requires a related gate drive circuit [40]. This may cause the overall system to be more expensive and complex. Plentiful multilevel converter topologies have been proposed during the last two decades. Contemporary research has engaged novel converter topologies and unique modulation schemes.

In recent years, new industrial applications for medium and high voltage motors (which may require voltages in megawatts ranges) applied these inverters which can be used as an alternative to the power of a multilevel converter for high and medium renewable energy sources. The use of multilevel converters has been started since 1975, which is in fact the development of the two-level converters. Purpose of the use of multilevel converters, access to a high power is the key to a series of semiconductor strength and low DC voltage sources for energy conversion based on elements such as capacitors, batteries and renewable energy sources is implemented. Using the appropriate switching and considering several sources of input DC converters, high voltage can be obtained in a multilevel converter output. Multilevel converters have advantages and disadvantages compared to two level converters considering switching frequency and Pulse Width Modulation (PWM) can include. 1- Quality of the AC output waveform: a multilevel converter cannot only produce a voltage output with extremely low distortion, also capable of decreased stress dv /dt. So the problem of electromagnetic interference (EMI) can be reduced. 2 - Less Common Mode voltage (CM): less CM voltage multilevel converters and therefore less stress on the motor bearings as well as semiconductor components connected to a multi-level inverter will be reduced. 3 - The input source: the use of multilevel converters can already having low distortion input sources, problems related to power quality in distribution systems to overcome. 4 - Switching frequency: multilevel converters can be both primary and high switching frequency to be used. Lower switching frequency usually means higher efficiency as well. The disadvantages of multilevel converters can also be summarized as follows: 1 - To be expensive due to the high number of switching elements (which cannot be economically affordable.) 2 - Design complexity due to the lack of sufficient knowledge (creates problems) 3 - Different techniques for controlling converters, multilevel provided. Example can be pulse width modulation sine, eliminating the harmonic selective modulation vector space mentioned. Most important applications of inverters multilevel can to drive motors, medium voltage, transmission systems AC flexible and renewable energy sources are connected to the grid . In this section, the advantages and disadvantages of multilevel converters, kind of actives switch usage, how to charge and discharge the closing of diodes and capacitors of the converter structure and especially for the inverter connected to the grid will be reviewed

## III. Modulation Schemes

To control the frequency and harmonics of the output voltage of the inverter, we must select the most appropriate PWM technique. The sinusoidal PWM (SPWM) method has been applied to the power switches, in which a reference sinusoidal wave of fundamental frequency is compared to high frequency carrier wave(s). The level, frequency or amplitude of the multiple carrier signals are varied based on the PWM technique. The modulation indices are kept same in all the methods for comparison. Amplitude modulation index is the ratio of the amplitude of the reference sine wave to the amplitude of the carrier waves. Frequency modulation index, is defmed as the ratio of the frequency of carrier wave to the frequency of the modulating wave.

The PWM techniques in this paper are InPhase Disposition (lPD) type level shift pulse width modulation (LS-PWM), Anti-Phase Disposition (APD) PWM, Carrier Overlap (CO) PWM and Variable Frequency (VF) PWM. The amplitude modulation index rna is maintained at 0.9 and the frequency modulation index mr at 200. The RMS value of the fundamental component of the output voltage and the total harmonic distortion (THD) are observed by using simulation results. In all the PWM techniques, 'N' number of carrier signals are used to obtain 2N+ 1 voltage levels.

In this paper, control technique of phase shifted (PS-PWM) and level shifted (LS-PWM) pulse width modulation strategy is employed. The two pwm techniques are,

*3.1 Phase Shifted PWM (PSCPWM)*

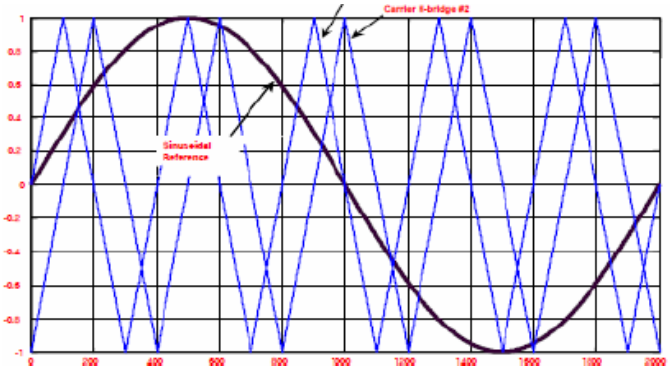


*Fig. 2 Phase Shifted Carrier PWM*

In psc pwm all the triangular carriers have the same frequency and same peak-peak amplitude .but there is a phase shift between any two adjacent carrier waves.For m Voltage levels (m-1) carrier signals are required and they are phase shifted with an angle of θ=(360°/m-1).The gate signals are generated with proper comparison of carrier wave and modulating signal .

*3.2 Level shifted PWM (LSCPWM*

For carriers signals, the time values of each carrier waves are set to [0 1/600 1/300] while the outputs values are set according to the disposition of carrier waves. After comparing, the output signals of comparator are transmitted to the IGBT. This technique is divided into 3 types,

**In Phase disposition (IPD)**

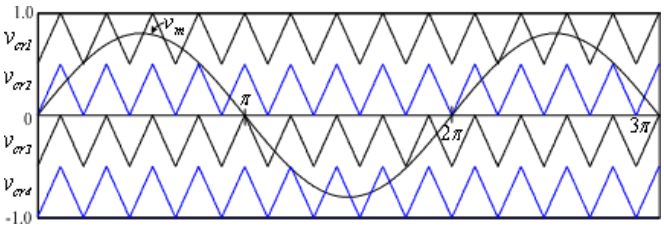


*Fig.3 in phase disposition*

All the carrier signals are in phase.

**Phase opposition disposition (POD)**

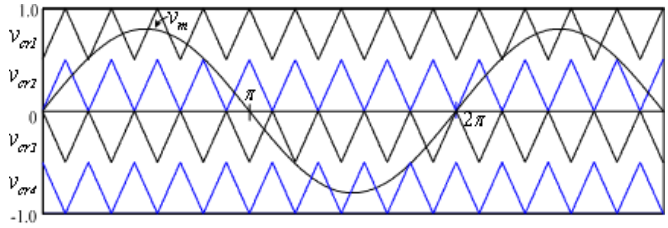


*Fig.4 phase opposition disposition*

All the carriers above zero reference are in phase but in opposition with those are below zero reference.

*Alternate phase opposition disposition (APOD)*

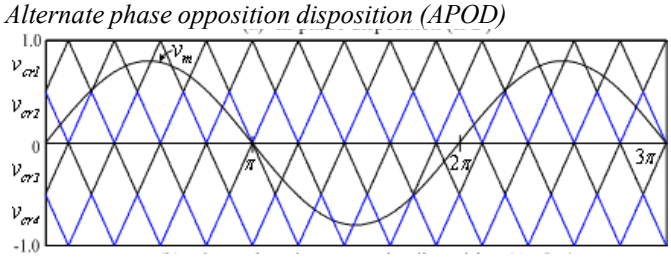


*Fig.5 Alternate phase opposition disposition*

The modulating signal of each phase is displaced from each other by 120°. All the carrier signals have same frequency Fc and amplitude Ac while the modulating signal has a frequency of fm and amplitude of Am. The fc should be in integer the multiples of fm with three-times. This is required for all the modulating signal of all the three phases see the same carriers, as they are 120° apart. The carrier waves and the modulating signals are compared and the output of the comparator defines the output in the positive half cycle the comparator output will have the value high, if the amplitude of the modulating signal is greater than that of the carrier wave and zero otherwise. Similarly for the negative half cycle, if the modulating signal is lower than the carrier wave the output of the comparator is high and zero otherwise.

## IV. Simulation Results

The Multilevel inverter plays an important role in the medium and the high power applications due to their excellent advantages than some compromising disadvantages. Among the existing multilevel inverters, the diode clamped multi level inverter has far wide applications due to the less number of capacitors and better DC bus utilization. As the applications of the multi level inverter are far wide increasing, the problem associated with the multi level inverter become crucial and worth solving. Among them the most important problem was the Neutral point voltage stabilization. The proposed technique is tested for the various conditions which causes the neutral point voltage imbalance. The results are compared with the sine PWM technique. As the main causes for the neutral point unbalance in the multilevel inverter are the unbalanced loaded conditions, capacitor characteristics, switching characteristics, PF of the load.

An inverter is a circuit that converts DC sources to AC sources. Phase Disposition Sinusoidal Pulse Width Modulation is a technique that use as a way to decrease total harmonic distortion in inverter circuit. The model is implemented using MATLAB/Simulink software with the SimPower System Block Set based on computer simulation. Computer simulation plays important role in the design, analysis, and evaluation of power electronic converter and their controller. MATLAB is an effective tool to analyze a PWM inverter. Advantages of using MATLAB are the following: faster response, availability of various simulation tools and functional blocks and the absence of convergence problems. Simulink is a software package for modeling, simulating, and analyzing dynamical systems. It supports linear and nonlinear systems, modeled in continuous time, sampled time, or a hybrid of the twoSim Power Systems operates in the Simulink environment.

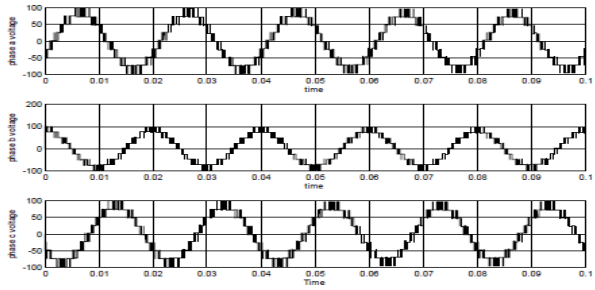

*Fig Three phase output voltage wave form for a proposed 5-level DCMLI*

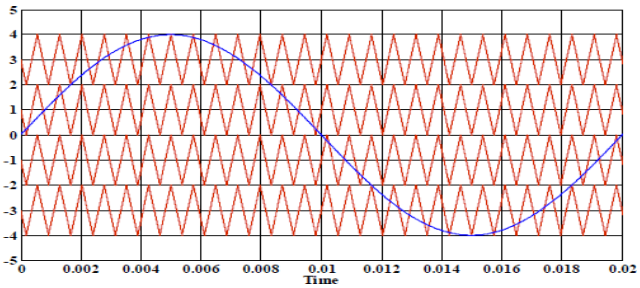


*Fig : Modulation technique for Conventional Sine pwm*

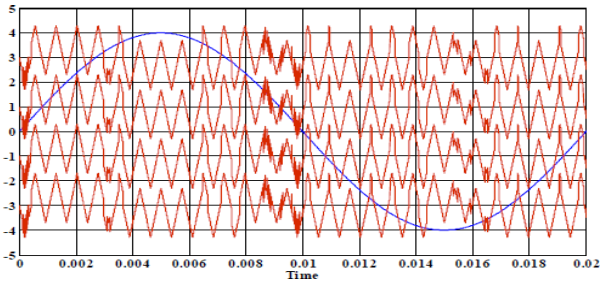


*Fig : Modulation technique for Proposed Sine pwm*

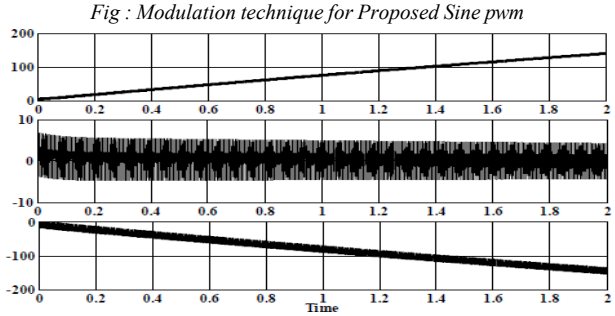


*Fig Neutral-point voltage for Conventional Sine pwm*

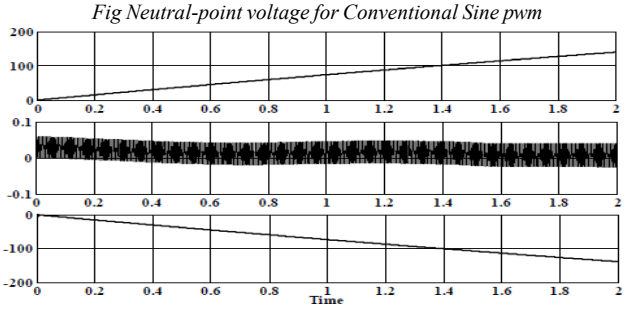


*Fig : Neutral-point voltage for Proposed Sine pwm*

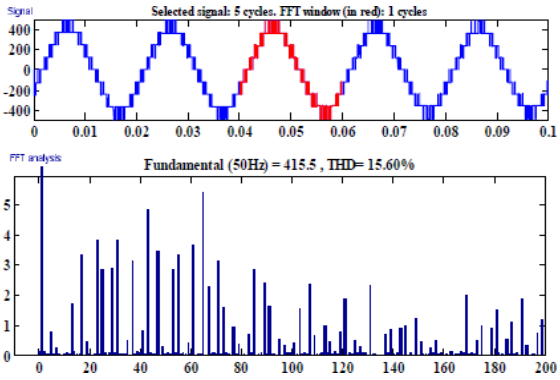


*Fig : THD for Sine pwm*

*Proposed Method*

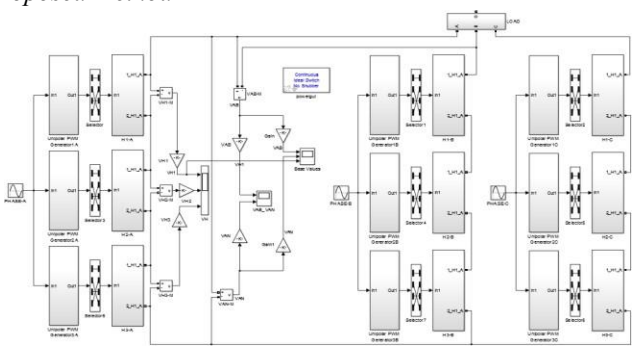

*Fig:Seven-Level CHB Inverter with Phase-Shifted PWM*

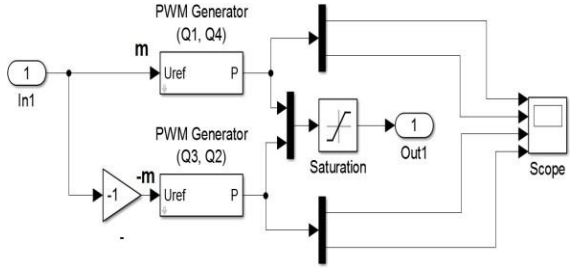


*Fig: Unipolar PWM Generator*

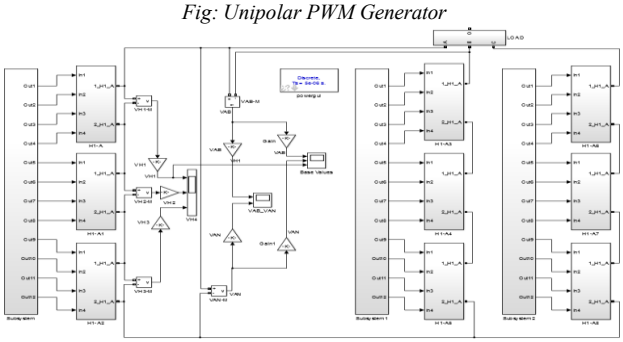

*Fig: Seven-Level CHB Inverter with Level-Shifted PWM*

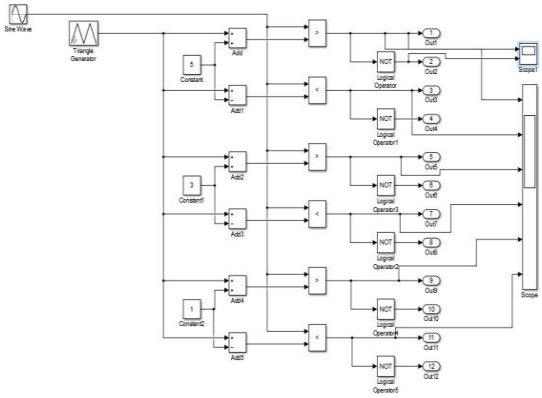

*Fig: Level-Shifted PWM Carrier using In-phase Disposition (IPD)*

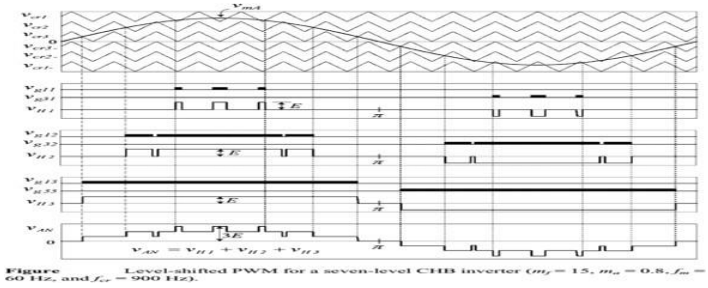

Figure Level-shifted PWM for a seven-level CHB inverter ($m_f = 15$, $m_a = 0.8$, $f_m =$ 60 Hz, and $f_c = 900$ Hz).

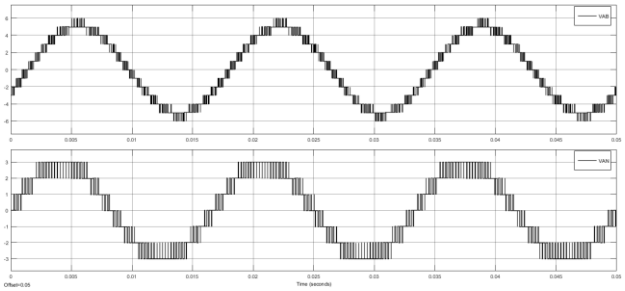

*Level shifted PWM Method Vab and Van*

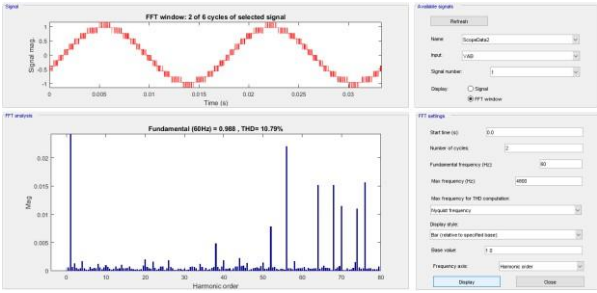


*THD Analysis for Level shifted PWM Method Vab*

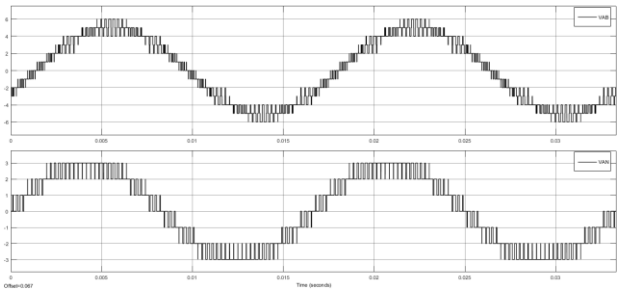

*Phase shifted PWM Method Vab and Van*

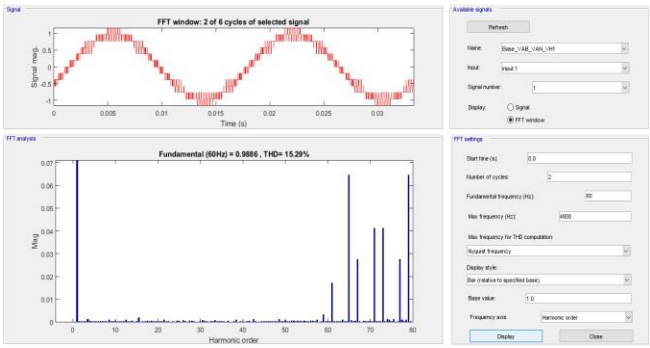


*THD Analysis for Phase shifted PWM Method Vab*

| Comparison | Phase-Shifted Modulation | Level-Shifted Modulation |
|---|---|---|
| Device switching frequency | Same for all devices | Different |
| Device conduction period | Same for all devices | Different |
| Rotating of switching patterns | Not Required | Required |
| Line-to-line voltage THD | Good | Better |

**THD% of $v_{AB}$ for Phased-Shifted and Level-Shifted PWM with 2 different $m_a$**

| $m_a$ | Phased-Shifted | Level-Shifted |
|---|---|---|
| 0.99 | 15.29% | 10.79% |
| 0.25 | 74.34% | 43.25% |

## V. Conclusion

The Multilevel inverter plays an important role in the medium and the high power applications due to their excellent advantages than some compromising disadvantages. The CHB Seven Level Inverter with Level shifted and phase shifted is presented and compared diode clamped multi level inverter has far wide applications As the applications of the multi level inverter are far wide increasing, the problem associated with the multi level inverter become crucial and worth solving. Among them the most important problem was the Neutral point voltage stabilization. A Novel level shifting carrier-based neutral point voltage balancing for a seven -level CHB inverter in combination with a closed-loop controller has been proposed in this thesis. The proposed level shifting carrier PWM provides improved inverter performance in terms of reduced Total Harmonic Distortion (THD), harmonic profile, neutral point voltage and balanced dc link with near zero average Neutral point voltage.

## *References*


[1] Jose Rodriguez, Steffen Bernet, Peter K. Steimer, Ignacio E. Lizama, —A Survey on Neutral-Point-Clamped Inverters, —*IEEE transactions on industrial electronics*, VOL. 57, NO. 7, JULY 2010

[2] J. Rodriguez, J.-S. Lai, and F. Z. Peng, —Multilevel inverters: a survey of topologies, controls, and applications, — *IEEE Trans. Ind. Electron.*, vol. 49, pp. 724-738, 2002.

[3] J. S. Lai and F. Z. Peng, —Multilevel converters – A new breed of power converters, —*IEEE Trans. Ind. Applicant.*, vol. 32, pp. 1098–1107, May/June 1996.

[4] Z. Pan, F. Zheng Peng and all, —Voltage Balancing Control of Diode-Clamped Multilevel Rectifier/Inverter Systems‖, *IEEE transactions On Industry Applications*, Vol -41. N° 6, Nov/Dec 2005, pp. 1668-1706.

[5] Rangarajan M. Tallam, Rajendra Naik, and Thomas A.Nondahl,Fellow, —A Carrier- Based PWM Scheme for Neutral-Point Voltage Balancing in Three-Level Inverters, ’’ *IEEE Trans. Ind. Appl*., vol. 41, no. 6,PP. 1734-1743, November/December 2005.

[6] K. Narasimha Raju and Venu Gopala Rao Mannam, —An effective carrier based PWM technique for neutral point voltage stabilization of three level inverter,‖ in IEEE conf. on Smart Electric Grid (ISEG), 2014

[7] Nikola Celanovic, and Dushan Boroyevich, —A Comprehensive Study of Neutral-Poin Voltage Balancing Problem in Three-Level Neutral-Point-Clamped Voltage Source PWM Inverters, ‖*IEEE Trans.Ind.Appl.,* vol. 15, no. 2,PP. 242-249, March 2000.

[8] Amit Kumar Gupta, and Ashwin M. Khambadkone, —A Simple Space Vector PWM Scheme to Operate a Three-Level NPC Inverter at High Modulation Index Including Over modulation Region, With Neutral Point Balancing, —*IEEE Trans.Ind.Appl*., vol. 43, no. 3, PP. 751-760May/June 2007

[9] Jordi Zaragoza, Josep Pou, Salvador Ceballos, Eider Robles, Pedro Ibáñez and Jose Luis Villate, —A Comprehensive Study of a Hybrid Modulation Technique for the Neutral- Point-Clamped Converter, —*IEEE Trans. Ind. Appl.,* vol. 56, no. 2,PP . 294-304, February 2009

[10] Georgios I. Orfanoudakis, Michael A. Yuratich, and Suleiman, —Hybrid Modulation Strategies for Eliminating Low-Frequency Neutral-PointVoltage Oscillations in the Neutral-Point-Clamped Converter, —*IEEE Trans. Pow.Elec*.,vol 28,no.8,PP. 3653- 3658,August 2013 36

[11] K Narasimha Raju, M Rao, M Ramamoorthy, —Hybrid modulation technique for neutral point clamped inverter to eliminate neutral point shift with minimum switching loss,‖ in *TENCON conf.* 2015

[12] Rasoul Shalchi Alishah, Seyyed Hossein Hosseini —A New Multilevel Inverter Structure For High-PowerApplications using Multi-carrier PWM Switching Strategy‖ International Journal of Power Electronics

and Drive System (IJPEDS) Vol. 6, No. 2, June 2015, pp. 318~325 ISSN: 2088-8694

[13] P. N. Tekwani, P. N. Tekwani, and K. Gopakumar, —A Dual Five-Level Inverter-Fed Induction Motor Drive With Common-Mode Voltage Elimination and DC-Link Capacitor Voltage Balancing Using Only the Switching-State Redundancy—Part I, —*IEEE Trans.Ind.Appl.,* vol. 54, no. 5,PP. 2600-2608, October 2007

[14] P. N. Tekwani, P. N. Tekwani, and K. Gopakumar, —A Dual Five-Level Inverter-Fed Induction Motor Drive With Common-Mode Voltage Elimination and DC-Link Capacitor Voltage Balancing Using Only the Switching-State Redundancy—Part II, —*IEEE Trans.Ind.Appl.,* vol. 54, no. 5,PP. 2609-2617, October 200

[15] Chenchen Wang, and Yongdong Li, —Analysis and Calculation of Zero-Sequence Voltage Considering Neutral-Point Potential Balancing in Three-Level NPC Converters, —*IEEE Trans.Ind.Appl*., vol. 57, no. 7,PP. 2262-2271, July 2010

[16] Joachim Holtz, and Nikolaos Oikonomou, —Neutral Point Potential Balancing Algorithm at LowModulation Index for Three-Level Inverter Medium-Voltage Drives, —*IEEE Trans.Ind.Appl.,* vol. 43, no. 3, PP.761-768,May/June 2007

[17] Till Boller, Joachim Holtz, and Akshay K. Rathore, —Neutral-Point Potential Balancing UsingSynchronous Optimal Pulsewidth Modulation of Multilevel Inverters in Medium- Voltage High-Power AC Drives, —*IEEE Trans.Ind.Appl.*, vol. 50, no. 1,PP.549-557, January/February 2014

[18] Bin Wu,*IEEE* Press,Wiley Interscience, —High-power converters and AC drives, — 2006