Simulation and Analysis of a 3-Phase Induction Motor and a Brushless DC Motor Using Simulink

Ritika[1], Shrishti Luthra[2], Sangeeta Modi[3]
Department of Electrical and Electronics, PES University, Bangalore,India

To Cite this Article
Ritika, Shrishti Luthra and Sangeeta Modi, "Simulation and Analysis of a 3-Phase Induction Motor and a Brushless DC Motor Using Simulink", Journal of Science and Technology, Vol. 05, Issue 04, July-August 2020, pp17-27

Article Info
Received: 09-03-2020 Revised: 05-06-2020 Accepted: 08-06-2020 Published: 11-06-2020

Abstract: *This paper proposes the Simulation and Analysis of a 3-Phase Induction Motor and a Brushless DC Motor using the MATLAB/Simulink environment. In this paper a three-phase squirrel cage induction motor is simulated under different load conditions and the characteristic graphs of this motor are obtained. Induction motors are the most widely used motor drive and thus the results obtained are important in understanding and designing the motor for precise command and control. In a BLDC motor, the torque characteristic plays an important role in the design and analysis of BLDC motor drive systems which is used in industries for automated vehicles and collaborative robots. Therefore, it is necessary to predict the precise value of torque, which is determined by the characteristics obtained as a result of simulating back EMF vs time for the BLDC motor addressed in this paper. Both these motors are most widely used and find their application in various industries such as Automotive industry, Automobile sector, Aerospace, Pulp and Paper industry, Medical, consumer, Induction Automation Equipment and Instrumentation.*

Keywords*: 3-Phase Induction Motor, BLDC Motor, MATLAB, Simulink, Back EMF*

1. Introduction

Induction and BLDC motors are considered the most widely used motors from the industry perspective, this is mainly due to the many advantages that these motors offer.

Within the last century the induction motor has evolved into an efficient support system for various industries involved in pro- viding services to make our day to day lives easier, for example the induction motor is used in almost all our domestic appliances such as washing machines, water pumps, refrigerators etc[1]. Induction motors draw direct supply from the electricity distribution, so voltage on the line can be varied to get different speeds from the motor for different load conditions. It can be made to run with inverter control and without too, this makes the Induction Motor very flexible in its operation. Induction motors are the most widely used motors in the industry due to their

- Simple and robust construction
- Low price
- Light weight
- High reliability and simple maintenance
- Easy command and control[2][4].

A BLDC basically are synchronous motors powered by direct current electricity via an inverter or switching power supply which produces electricity in the form of alternating current (AC) to drive each phase of the motor via a closed loop controller. The controller provides currentpulsesto the motor windings that control the speed and torque of the motor [5][6]. The torque of the BLDC motor is majorly influenced by the waveform of back-EMF. Ideally,

the BLDC motors have trapezoidal back-EMF waveforms and are fed with rectangular stator currents, giving a theoretically constant torque. Constant torque is necessary for industrial applications as the robots or automated vehicles. The BLDC motors have many advantages as compared brushed DC motors such as:

- Higher speed ranges
- Long operating life
- High efficiency
- High dynamic response
- Smooth torque delivery
- Noiseless operation[4][5]

II. Induction Motor

Table no 1: Components Required

S.no	Components	Quantity
1	Asynchronous motor	1
2	Ac voltage source	3
3	Power GUI	1
4	Scope	3
5	Display	3
6	Sum	1
7	Step	4
8	Bus selector	3
9	Gain	1

2.1. Simulink Model

Fig(1): Induction Motor Model

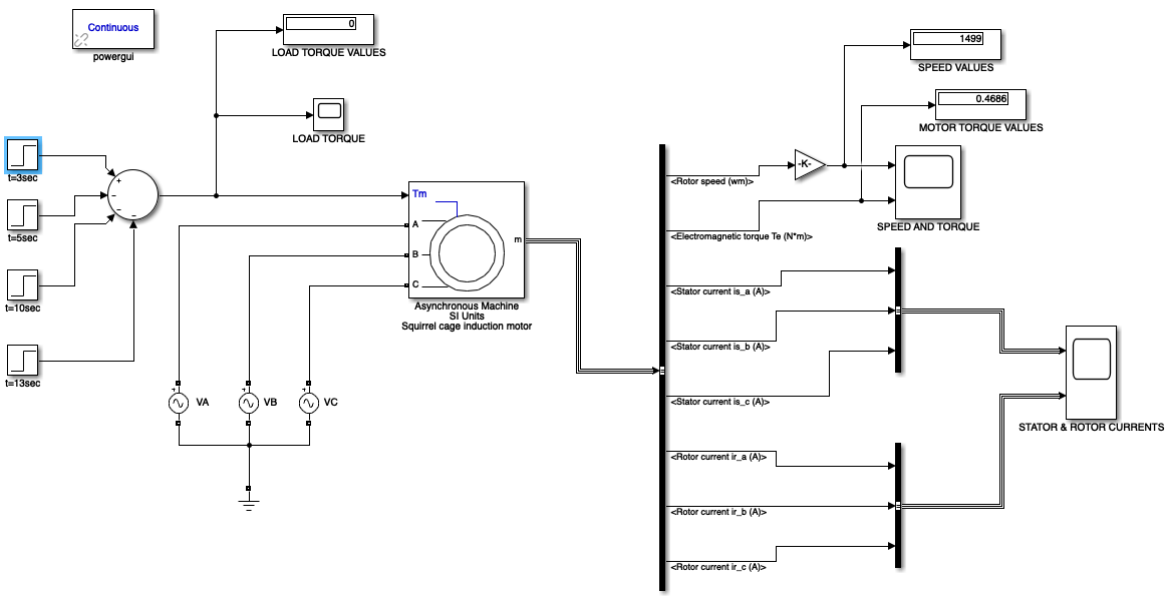

Fig(1) shows the MATLAB/Simulink model of a squirrel cage induction motor which is simulated to obtain the speed, torque, rotor and stator current characteristics associated with the motor taken into consideration.

2.2. Problem Statement and Associated Calculations

An induction motor with the specifications mentioned in Table no 2 is taken and with respect to these specifications load torque is calculated using the relations mentioned below,taking 15 seconds as the total running time and varying the load after each of the specified intervals within this period.

Table no 2: Induction motor specification

Description	Value
Model	Squirrel cage
Power	5.4 HP (4KW)
Voltage	400 V
Frequency	50 Hz
Speed at full load	1430 RPM

Taking the above mentioned values,

$$V_{max} = \sqrt{2}\, V_{rms}/\sqrt{3} \qquad (1)$$

From(1) $V_{max} = \sqrt{2}\, V_{rms}/\sqrt{3} = \sqrt{2} * 400/\sqrt{3} = 326.54$ V

T_a= Gross (total) mechanical torque/ motor torque
T_{lost} = loss due to friction, windage and iron losses
T_{sh} or T_L =Load Torque

$$T_a = T_{lost} + T_L \quad (2)$$

$$P_{out} = T_L * \omega \quad (3)$$

$$T_L = P_{out}/\omega \quad (4)$$

P_{out} = 4000W
$\omega = 2 * \pi * N/60 = 2*\pi*1430/60 = 149.67$ rad/sec
$T_{sh}(T_L)$= 4000/149.67
$T_{sh}(T_L) = 26.72$ Nm
$T_L/2$=13.36 Nm
$T_L/4$=6.68 Nm

Table no 3: Observation table

t (time in sec)	3	5	10	13
Load torque	T_L= 26.72	$T_L/2$=13.36	$T_L/4$=6.68	0

2.3. Simulation Results

Fig(2): Speed and Torque Curves

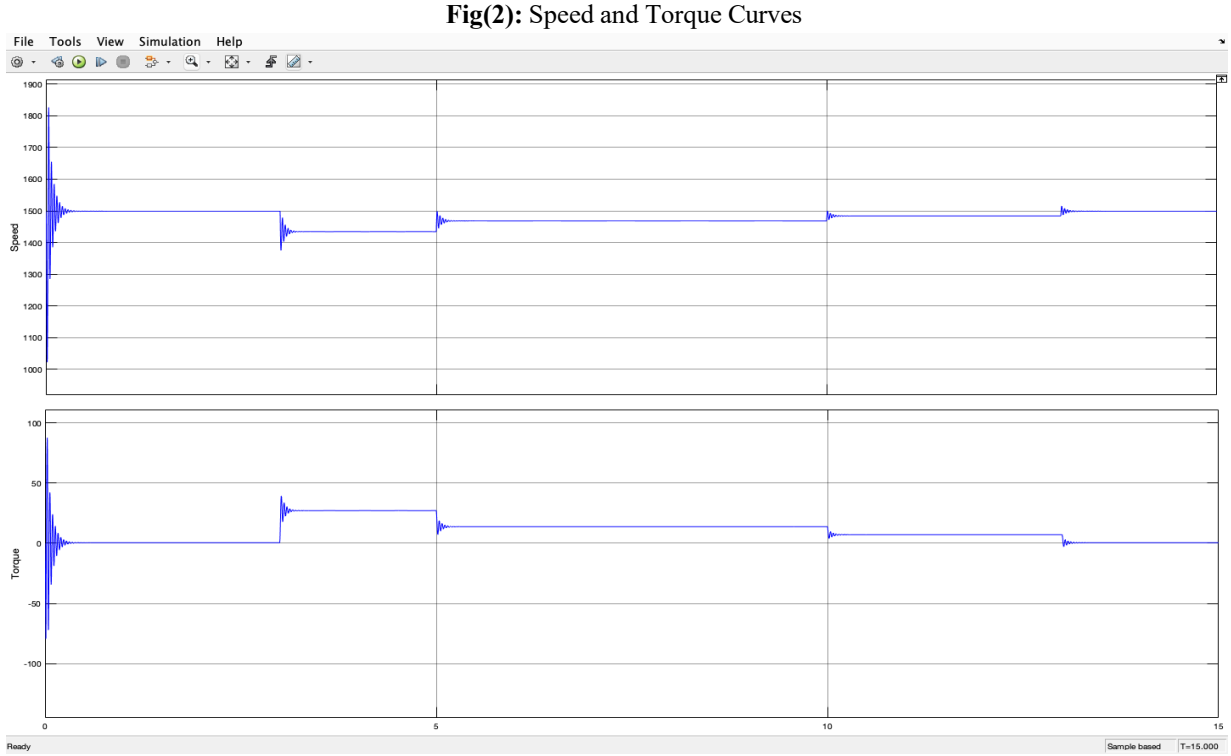

From Fig(2) we infer that:

1. At t=3 sec
   The load on the motor is full load therefore speed decreases and torque increases from zero to a certain value
2. At t=5 sec
   Half load on the motor hence speed increases and torque decreases
3. At t=10 sec
   ¼ th of the full load hence speed further increases and torque further decreases
4. At t= 13 sec
   There is zero load on the motor hence speed increases and reaches the final value(nearly 1500 RPM) and torque still decreases and goes back to zero

Fig(3): Stator and Rotor Currents

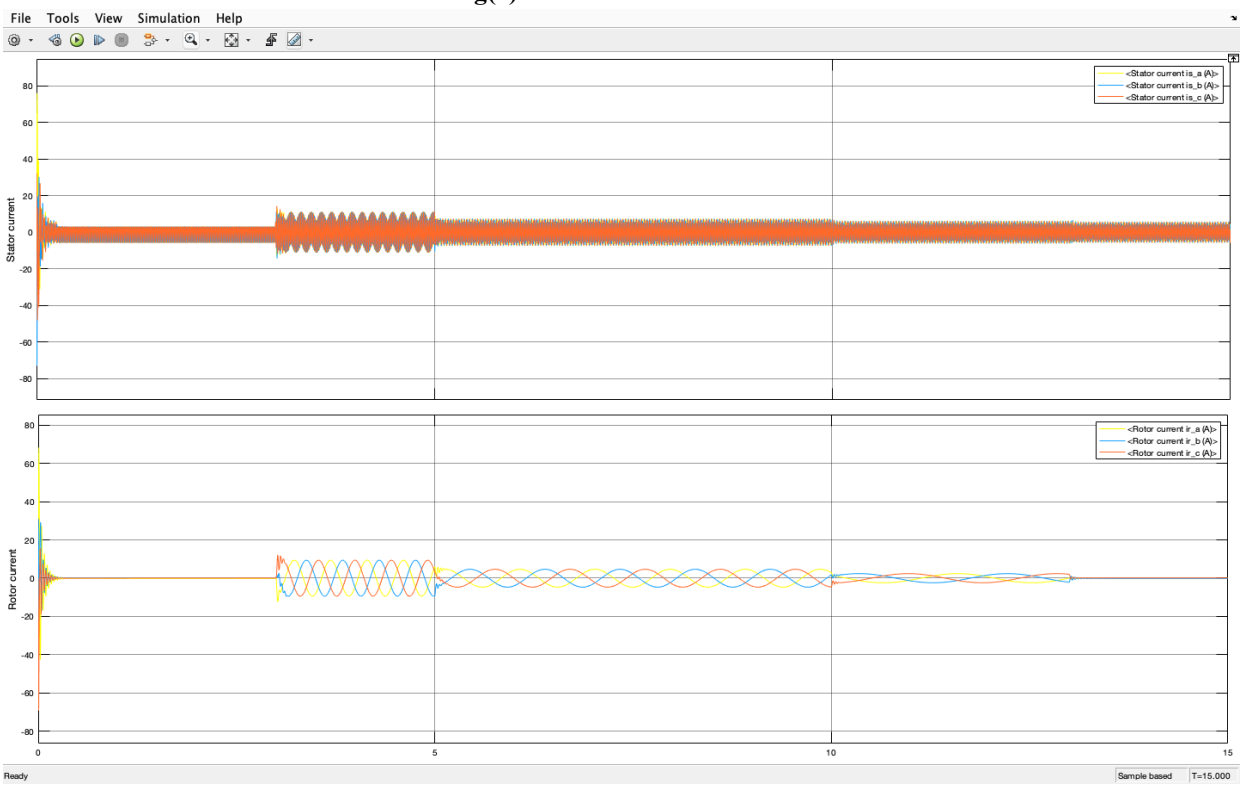

From Fig(3) we infer that:

1. At t=3 sec
   The load on the motor is increased so both stator and rotor currents increases since we need more current to produce the torque
2. At t=5 sec
   The load on the motor decreases hence the stator and rotor currents decreases
3. At t=10 sec
   The load on the motor further decreases hence the stator and rotor currents further decreases
4. At t= 13 sec
   The load on the motor is zero therefore the rotor currents are back to zero and there is a very small amount of stator current due to losses etc.

Fig(4): Load Variation Curve

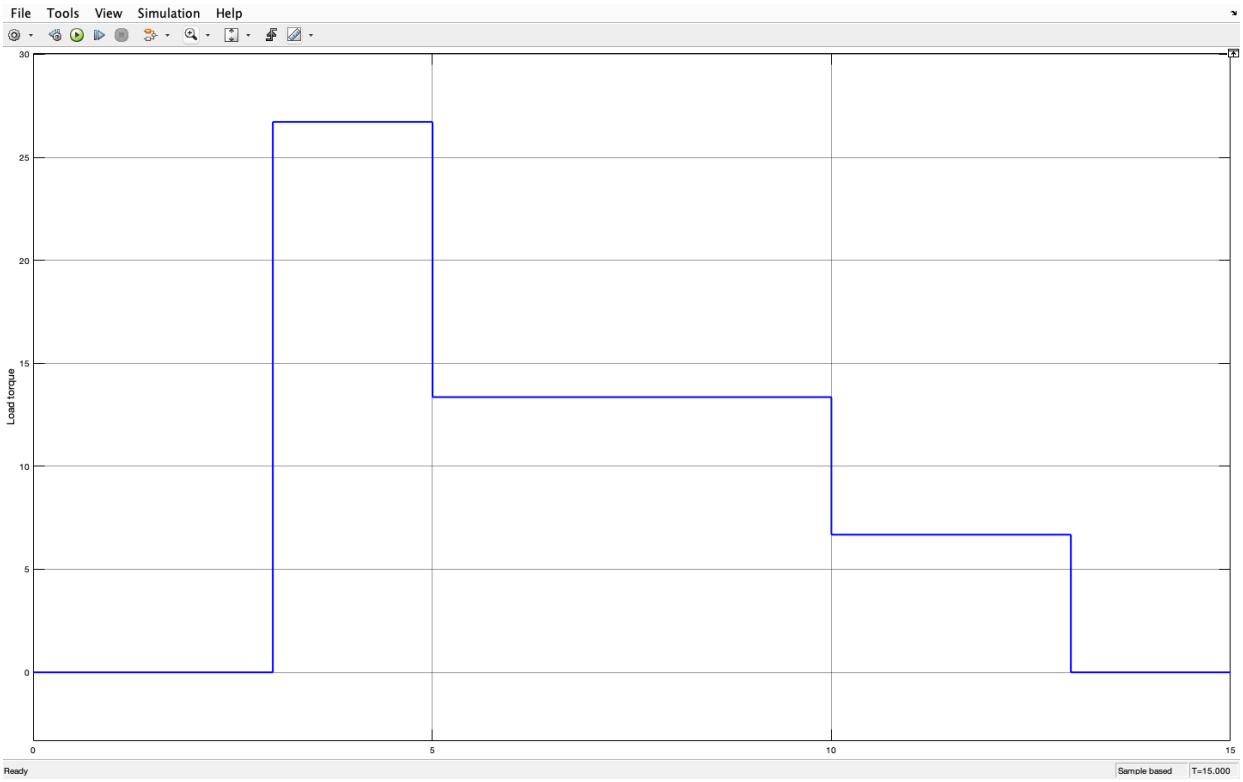

From Fig(4) we infer that:

1. From 0-3 sec there is No load on the motor
2. At t=3 sec there is full load on the motor
3. At t=5 sec there is ½ the full load on the motor
4. At t=10 sec there is ¼ the full load on the motor
5. At t=13 sec there is no load on the motor

2.4. Applications

Squirrel cage Induction motors are used in various industries for various purposes such as:

- Paper industry (for paper production, for making pulp etc.)
- Pumps,Compressors
- Machine tools
- Blowers-fans
- Belt Conveyors
- Textile Industries (spinning , Weaving)
- Domestic Appliances(washing machine ,water pumps,refrigerators)

The 3-phase induction motors are widely used as industrial drives because of their ability to self-start, their reliability and the fact that these motors are very economical makes them a suitable choice in many industries such as pulp and paper industry, where they are used in various sections (wire section, press section, dryer section; where the loads are varied at different drive points for various processes) of a paper manufacturing machine. The above obtained results can be used to build control and efficiency strategies as per the requirement of the respective industries.

III. Brushless DC Motor

A three-phase BLDC (Brushless DC motor) is simulated and its back EMF voltage profile is investigated.

3.1. Problem Statement

In the Automotive Industry, there is a need for constant speed and torque for various applications. Constant torque is a major requirement for the movement of an Automated Guided Vehicle or Collaborative Robots. For thebest performance of the BLDC motor, the drive current should match the back EMF waveform, so BLDC motors should be driven using Trapezoidal (or Modified Square) Waveforms[7]. The simulation below gives the curve of back EMF which can be related to the torque characteristics accordingly.

3.2. Dynamic Model of BLDC Motor

The Fig(5) shows the Dynamic model of the BLDC Motor. The motor has three phases, and the equations implying the voltage equation of the stator windings are given below as equations (5), (6) and (7):

$$V_{an} = R_a I_a + L_a(di_a/dt) + e_a \quad (5)$$

$$V_{bn} = R_b I_b + L_b(di_b/dt) + e_b \quad (6)$$

$$V_{cn} = R_c I_c + L_c(di_c/dt) + e_c \quad (7)$$

Where,

V_{an}, V_{bn} and V_{cn} are the phase voltage in volts.

i_a, i_b and i_c are the phase current in amps.

e_a, e_b and e_c are phase voltage back-emf in volts.

R_a, R_b and R_c are phase resistance in ohms.

L_a, L_b and L_c are phase inductance in henry.

Fig(5): Dynamic Model of BLDC Motor

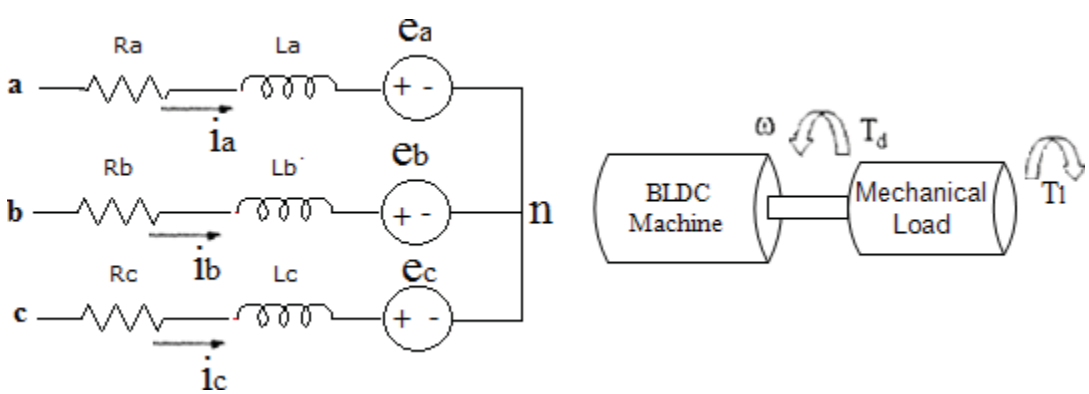

The mechanical equation that relates the machine's angular velocity to the developed electromagnetic torque, load torque and motor parameters is given by equation (8), (9) and (10):

$$T_{em} = \omega B + J_m(d\omega/dt) + T_L \quad (8)$$

$$T_{em} = k_t * i_a \quad (9)$$

$$e_a = k_e * \omega \quad (10)$$

Where,

T_{em} is the developed electromagnetic torque in Nm

ω is the rotor angular velocity in rad/sec

B is the viscous friction constant in N-m/rad/sec

J_m is the rotor moment of inertia in Kg-m2

T_L is the load torque in Nm

k_e is the back emf constant

Now, the below given Table No. 4 gives the list of the components required for simulating the back EMF of the motor.

Table No 4: Components Required

S. No.	Components	Quantity
1.	Brushless DC Motor	1
2.	Open Circuit Block	3
3.	Electrical Reference (Ground)	1
4.	Ideal Angular Velocity Source	1
5.	Mechanical Rotational Reference	1
6.	Constant Block	1
7.	Simulink-PS Converter	1
8.	Solver Configuration	1
9.	Voltage Source	1
10.	PS-Simulink Converter	1
11.	Scope	1

Table No. 5 gives the details about the type of motor used and its specifications:

Table No 5: Brushless DC Motor Specification

Description	Value
Model	Permanent Magnet BLDC Motor
Power	5 HP
Voltage	240 V
Frequency	50 Hz
Speed at Full load	1750 RPM
Rotor Angle for Constant Back EMF	120 degrees
Stator d-axis Inductance (L_d)	8.5 mH
Stator q-axis Inductance (L_q)	8.5 mH
Stator Resistance per Phase (R_s)	0.04 Ohms

3.3. Simulink Model

Fig(6): BLDC Motor Simulink Model

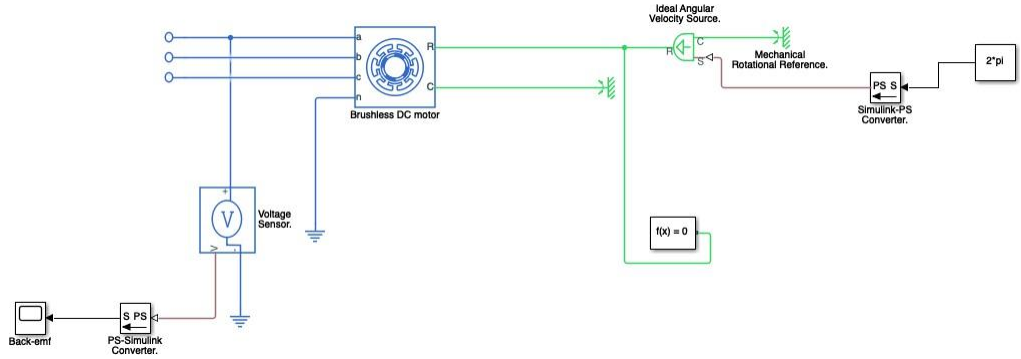

Fig(6) shows the model to simulate a three-phase BLDC and to monitor the back-EMF. It consists of a 3-Phase BLDC motor which has a Mechanical Rotational Reference connected to it. The motor shaft is turned while the terminals are left open circuited at all three phases. The voltage produced at one of the three phases is measured using a Voltage Sensor to observe the back-EMF. The necessary conversions from Simulink signals to Simscape signals and vice versa are done using Simulink-PS and PS-Simulink converters.

3.4. Simulation Results

Fig(7): Back EMF Curve

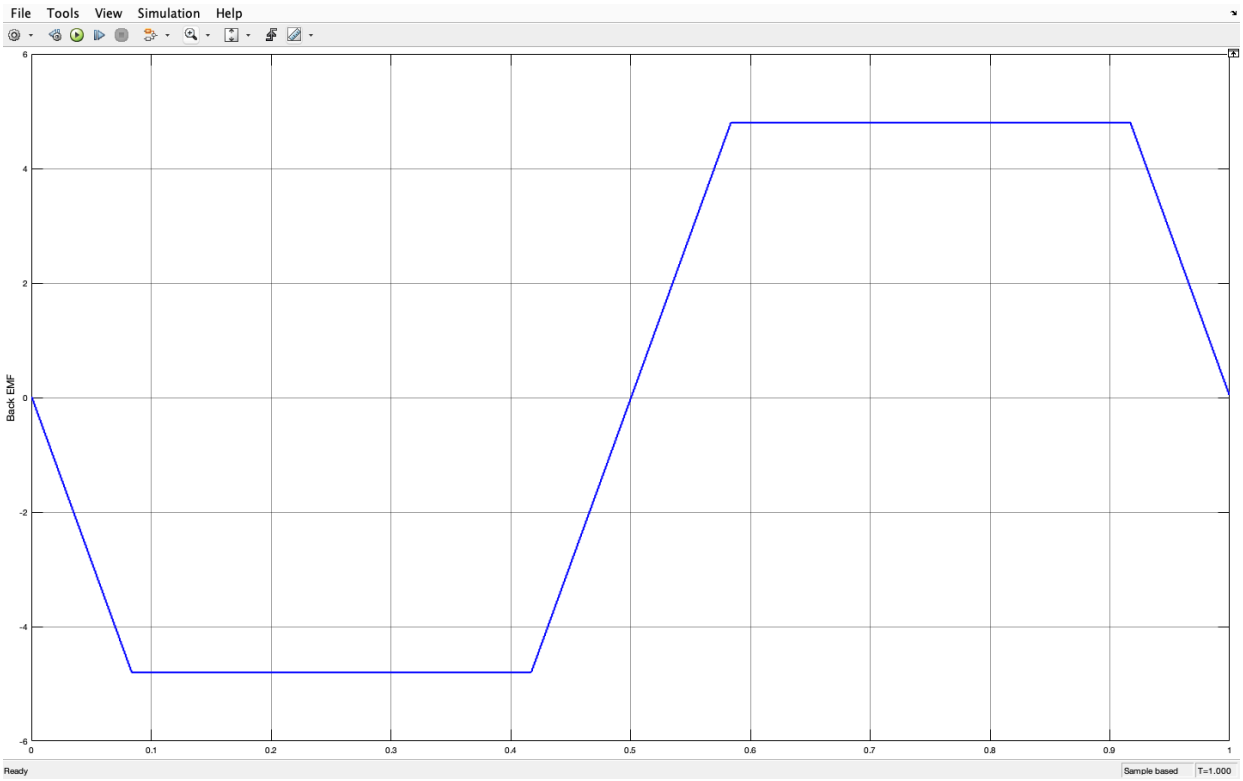

As we can observe from the above output graph in Fig(7):

- From t= 0 sec to t= 0.08 sec
  The back EMF begins at zero and reduces to a negative value.
- From t= 0.08 sec to t= 0.42 sec
  The back EMF remains at a constant value (-5V approximately).
- From t= 0.42 sec to t= 0.58 sec
  The back EMF begins to gain a positive value from -5V and goes till +5V.
- From t= 0.58 sec to t= 0.92 sec
  The back EMF remains at a constant value (+5V approximately).
- From t= 0.92 sec to t= 1 sec
  The back EMF value starts reducing and goes till zero. In this manner one cycle gets completed.

Torque of the BLDC motor is majorly affected by the back EMF. The trapezoidal shape with constant value lasts for 120 electrical degrees in each half cycle as shown in Fig(7) and the two linear change intervals between the positive and the negative constant values (flat intervals) in each half cycle lasts for 60 electrical degrees. This happens because the rotor angle for constant EMF was chosen as 120 electrical degrees for simulation. When the back EMF waveform is trapezoidal (and matches the drive current), then best performance of the BLDC motor can be achieved.

3.5. Applications

The Brushless DC Motors are widely used for a variety of applications. Some of them are as follows:

- Electric and Hybrid vehicles.
- Automated Vehicles (such as Rail guided Vehicles, Tape Guided Vehicles, Collaborative Robots, etc.).
- Industry basedautomation design.
- Motion control systems.
- Aeromodelling, to model aircrafts, helicopters and drones.
- Radio-controlled cars.
- Cordless tools like trimmers, blowers, drills and drivers.
- Heating, ventilation, air conditioning and refrigeration industries.
- Computer hard drives and DVD/CD players.

The above obtained simulation result talks about the back EMF which plays a crucial role in determining the torque characteristic of the motor. Trapezoidal EMF curve ensures the best performance of the motor as the drive current matches the back EMF waveform. The Brushless DC Motor is extensively used in industries for automation processes due to its various advantagesandfeatures, such as low inertia, varied speed ranges,high torque, and high dynamic response. There are in-built encoders which can also be used in BLDC motors to measure the rotor's position for precise working. It also has a longer service life as compared to other motors due to lack of electrical and frictional losses which is very important in industries such as the automobile industry.

IV. Conclusion

In this paper, performance characteristics of both three phase Induction motor and BLDC motor have been obtained, thereby giving a better understanding as to why these two motors are widely used as compared to other motors used within the industry. A basic Simulink model of a three-phase induction motor has been implemented in this paper. First theoretical calculations were done using conventional methods and then it was simulated using MATLAB/Simulink software. The variations in speed, torque, rotor and stator currents with respect to the changes in load within the specified time have been plotted and analyzed. Induction motors are widely used due to their simple and robust construction, low cost, high reliability, low maintenance and simple command[2]. In this paper, the back EMF profile of a PermanentMagnetBLDC Motor is also simulated, which helps in understanding the behaviour of the motor depending on the shape of the output waveform. Here, the trapezoidal shape of the waveform implies that the motor is delivering its best performance which is required for automobile industries. BLDC motors are widely used in high performance applications because of their higher efficiency, they produce high torque in low-speed ranges, high power density, dynamic response, minimal maintenance and less noise production[4]. All simulations performed above are in accordance with the theoretical aspects of both the motors and can be further utilized for industrial applications such as Automotive, Automobile, Pulp and Paper, Process industries etc. This paper was written as a part of our final year project and the motors mentioned in this paper were used within the same.

References

[1]. Owen, E. L. (1988), “The Induction Motor’s Historical Past, IEEE Potentials, 7(3), 27–30. doi:10.1109/45.9969.

[2]. Punit L. Ratnani, Dr. A. G. Thosar, “Mathematical Modelling and Simulation of Induction Motor using Matlab/Simulink”, International Journal of Modern Engineering Research (IJMER), June 2014, Aurangabad, India.

[3]. De Jesus, V.-G. F., Omar, A.-J. M. (2013), “Characterizing the Squirrel Cage Induction Motor”, 2013 International Conference on Mechatronics, Electronics and Automotive Engineering, doi:10.1109/icmeae.2013.23.

[4]. AsthaMeshram, PayalBele, Shital Bawane, Ashish Lonbale, Abhay Halmare, “Comparative Analysis of BLDC Motor and Induction Motor using MATLAB/Simulink”, International Journal of Engineering Research in Electrical and Electronic Engineering (IJEREEE), Vol 4, Issue 3, March 2018.

[5]. A. Kusko and S. M. Peeran, ”Definition of the brushless DC Motor,” Conference Record of the 1988 IEEE Industry Applications Society Annual Meeting, Pittsburgh, PA, USA, 1988, pp. 20-22 vol.1, doi: 10.1109/IAS.1988.25036.

[6]. Xionghui and XueYanBo, ”The design of Brushless DC motor Back-EMF control,” 2010 The 2nd Conference on Environmental Science and Information Application Technology, Wuhan, 2010, pp. 92-94, doi: 10.1109/ESIAT.2010.5568925.

[7]. Tabarraee, K., Iyer, J., Chiniforoosh, S., Jatskevich, J. (2011). Comparison of brushless DC motors with trape- zoidal and sinusoidal back-EMF. 2011 24th Canadian Con- ference on Electrical and Computer Engineering(CCECE), doi:10.1109/ccece.2011.6030567.